R E P O R T R E S U M E S

ED 016 634 SE 004 214

THE MAN MADE WORLD, TEACHER'S MANUAL.

COMMISSION ON ENGINEERING EDUC., WASHINGTON, D.C.

PUB DATE 67

EDRS PRICE MF-$1.50 HC-$16.04 399P.

DESCRIPTORS- *CURRICULUM DEVELOPMENT, *CURRICULUM, *COMPUTERS, *ENGINEERING, *MATHEMATICS, *PHYSICAL SCIENCES, *SECONDARY SCHOOL SCIENCE, *TEACHING GUIDES, *TECHNOLOGY, BIBLIOGRAPHIES, ALGEBRA, EDUCATIONAL OBJECTIVES, SCIENCE ACTIVITIES,

THIS TEACHER'S MANUAL FOR THE ENGINEERING CONCEPTS CURRICULUM PROJECT'S HIGH SCHOOL COURSE, "THE MAN MADE WORLD," IS THE THIRD DRAFT OF THE EXPERIMENTAL VERSION. THE MATERIAL WRITTEN BY ENGINEERS, SCIENTISTS, AND EDUCATORS, EMPHASIZES ENGINEERING--MAN'S APPLICATION OF SCIENTIFIC PRINCIPLES TO THE CONTROL AND UTILIZATION OF HIS ENVIRONMENT. TECHNICAL ACCOMPLISHMENTS ARE RELATED TO ALL PHASES OF MAN'S ENDEAVOR--BIOLOGY, ECONOMICS, SOCIOLOGY, BUSINESS, COMMUNICATION, PSYCHOLOGY, AND THE ARTS AND HUMANITIES. IN PART I OF THE COURSE, CHAPTERS DEAL WITH (1) LOGICAL THOUGHT AND LOGICAL CIRCUITS, (2) BINARY NUMBERS AND LOGIC CIRCUITS, (3) LOGIC CIRCUITS WITH MEMORY, (4) ORGANIZATION OF A COMPUTER, AND (5) PROGRAMING. PART II INCLUDES CHAPTERS ON (1) MODELS, (2) OPTIMIZATION (OPERATIONS RESEARCH), (3) MODELING, (4) MODELS AND COMPUTERS, AND (5) PATTERNS OF CHANGE (DYNAMIC SYSTEMS). FOR EVERY CHAPTER OF THE MAIN TEXT, THE MANUAL HAS A CORRESPONDING CHAPTER ORGANIZED INTO EIGHT PARTS--(1) THE APPROACH, (2) OUTLINE OF CHAPTER, (3) OBJECTIVES, (4) DEVELOPMENT OF CONCEPTS, (5) SOLUTIONS TO HOMEWORK PROBLEMS, (6) EVALUATION, TESTS, QUIZZES, (7) RESOURCE MATERIALS, AND (8) TEACHER REFERENCES AND BACKGROUND INFORMATION SOURCES. DRAWINGS ARE INCLUDED FROM WHICH OVER-HEAD PROJECTOR TRANSPARENCIES MAY BE MADE OF THE MAJOR DIAGRAMS. NOTES FOR THE TEACHER ON THE LABORATORY EXPERIMENTS AND AN ANNOTATED FILM LIST ARE ALSO INCLUDED. (DH)

399

Teacher's Manual

U.S. DEPARTMENT OF HEALTH, EDUCATION & WELFARE
OFFICE OF EDUCATION

THIS DOCUMENT HAS BEEN REPRODUCED EXACTLY AS RECEIVED FROM THE PERSON OR ORGANIZATION ORIGINATING IT. POINTS OF VIEW OR OPINIONS STATED DO NOT NECESSARILY REPRESENT OFFICIAL OFFICE OF EDUCATION POSITION OR POLICY.

ED016634

The Man Made World

A high school course / developed by
Engineering Concepts Curriculum Project

A Program of the Commission on
Engineering Education / Washington, D.C.

SE 004 214

FOREWORD

The writers of these notes (most of whom have had two years' experience in teaching the course) debated at some length about the best form in which to cast them. Should we make them very complete in order to be as helpful as possible to teachers inexperienced in this course (and thus heap up a collection which might repel by its mass alone)? Or should we cut down drastically, expecting rather to trigger the memory than to inform it (and thus leave the beginner to flounder)? In this dilemma, we agreed on a multiple attack, and we urge that users of the Manual comment vigorously during their feedback sessions in order to direct us in the future.

We adopted as a preliminary guide the following plan of organization:

I. Approach: the relationship between the chapter and its neighbors; its part in the development of the book as a whole.

II. Outline: section headings of the chapter, with just enough comment to make the pattern visible.

III. Objectives: what your students should understand and what they should be able to do after studying the chapter.

IV. Development: a fairly detailed synopsis of the chapter, often with specific suggestions for introducing one concept or another.

V. Answers to homework problems, with complete solutions in all but the most obvious cases.

VI. Evaluation: suggested discussion and quiz questions, and usually a test on the chapter, all with answers.

VII. Resource materials: library references, especially those suitable for student use; classroom "resources" for the teacher.

VIII. Depth materials: bibliography for the teacher, background information, enrichment.

We expected Sections II, III and IV to be of value during the preparation of lesson plans.

Not surprisingly, the writers have had to diverge more or less from the planned outline. More important as far as feedback from teachers to writers is concerned, they have varied widely in the degrees of completeness of their offerings. In Part A, for example (where the need to explain basic circuits leaves little chance, in the first part, to develop a "story line"), the early chapters are quite brief. Where appropriate, however, they are supplemented at some length by background explanations of Boolean algebra and of the structure of logic. In Part B, Chapters 1 and 2 are extremely detailed. B-3 and B-4 steer a middle course, with emphasis on a four-stage "package" for immediate classroom

reference (Approach, Outline, Objectives, Homework solutions), followed by additional material to be looked over at his leisure by anyone inclined to do so.

Where experience suggests that they may be helpful, we have provided master sheets for your convenience in making transparencies for the overhead projector.

Solutions to homework problems, and suggested quiz or discussion questions (with their answers), have been printed on yellow stock; the Teacher's Laboratory Manual is on green, and its sheets are paged consecutively so that it will be convenient for you to collect them into a single pamphlet at the end of your copy of the Laboratory Manual itself. Thus both your manuals will be easy to recognize quickly if they are misplaced. Each page of the Teacher's Manual is imprinted TM in the lower left corner; the Teacher's Lab Manual is labeled TML. The students' lab manual is marked simply LM.

We have assessed a fair number of films. The order of the list is merely that in which we happened to view them. See the Introduction to the Film Notes for more information.

Finally, we repeat our earlier request. Please comment on the format and the fullness of treatment, either at feedback sessions or by letter to headquarters -- or both.

Committee on the Teacher's Manual

N. W. Badger
T. Earnshaw
J. R. Goldgraben
R. W. King
A. E. Korn
T. Liao
M. Simpson
R. A. Went

D. Eisner
R. Nemerson] Student Assistants

E. J. Piel
J. S. Barss] Co-chairmen

August 1967

CHAPTER A-1
INTRODUCTION

1. APPROACH

As the title of this chapter indicates, this is an introduction to the course. It is also an introduction to a way of thinking. Be sure to get the students involved in a discussion of this chapter (see 4).

2. MAJOR IDEAS

A. Language is the key to communication and symbols are basic to language.

B. Electronic digital computer is ultimate tool for dealing with symbols.

C. The stored program concept is one of the greatest discoveries this century.

D. The significance of the discovery of the transistor and magnetic core memory is highly important.

E. The importance of the computer to our society today and the effect of the computer on the world of tomorrow should be emphasized.

F. The necessity of understanding computers in our man-made world is highly important.

3. OBJECTIVES

To make the student aware of the major concepts listed in (2), especially C, E, and F.

4. DEVELOPMENT

This can best be done by class discussion. In fact, rather lively discussions can usually be developed concerning E and F . The teacher might want to deliberately take the view opposite to that of the students (if for example they all agree). Another approach is to have the students list some of the engineering achievements over the last several decades as well as some of the engineering failures. (The teacher should list these on the board).

An interesting discussion should follow with the teacher pointing out the particular topics from both lists which will be covered in the course. Incidentally, some of these failures are: Tacoma Narrows Bridge collapse, the Thresher disaster, the Apollo capsule tragedy.

5. ANSWERS

No questions in this introductory chapter.

6. EVALUATION

None in this chapter.

7. RESOURCE MATERIALS

A. Adler - The Thinking Machine - Mentor

B. Fink - Computers and the Human Mind - Science Study Series - Doubleday

C. Listen to Leaders in Engineering. Chapter by David, E.E. Jr. on Computing: An Alliance of Man and Machine. Tupper & Love.

D. Sluckin - Mind and Machines - Penguin

E. Thomson - The Foreseeable Future - Cambridge Univ. Press (Chapters Eight and Nine)

F. Kinzel - Engineering Civilization and Society - Science, June 9, 1967, p. 1343, Vol. 156, #3780 (a capsule history of engineering)

8. MATERIALS FOR DEPTH

See 7.

Chapter A-2

LOGICAL THOUGHT AND LOGIC CIRCUITS

I. Approach

1. The teacher should attempt to familiarize the student with the basic ideas of logic, especially pointing out some pitfalls in everyday reasoning situations. The "AND", "OR" and "NOT" relations should be emphasized and explored in terms of definitions and truth tables. (For additional background in logic, see VIII).

2. The teacher should emphasize the logic in terms of the basic logic circuits. The amount of Boolean algebra should be kept minimal. (For a more extensive explanation of Boolean algebra, refer to VIII).

3. Be sure to emphasize "make" and "break" contacts and proper symbolism. The river-crossing problem will be interesting to your students. Some may want to attempt a second solution.

4. The majority and odd parity circuits are highly important. These are the two essential circuits required to build a binary adder, which is a necessary component of any computer.

5. In Section 9, the problem involving agent 070, be sure to have the students list all possible solutions. (See IV for a development of this.)

II. Major Ideas

1. The use of the basic logic connectives "AND", "OR" and "NOT".

2. The use of the basic logic circuits for the above.

3. The use of truth tables in establishing the above.

4. The use of "make" and "break" contacts in building logic circuits.

5. The ability to build somewhat more complex logic circuits by using the basic logic circuits as components.

III. Objectives

1. To demonstrate how numbers and logical situations can be represented by binary elements in circuits.

2. To develop an understanding of contact circuits.

3. To develop an understanding of the use of truth tables in establishing simple logic situations.

IV. Development

1. While it is true that an extensive background in logic and Boolean algebra would be helpful to the student, the teacher must be careful to point out that only a minimum amount is required for success in this course. If a student or teacher desires more background than that which is given in the text, see VIII.

The very simplicity of the basic logic circuits should be emphasized and demonstrated with the student working with the L. C. B. and verifying this for himself.

2. The teacher should arrange to give the students as much time as possible working with the L. C. B. In fact, the students should probably be working with the L. C. B. every day. See the laboratory section of this manual for placement of experiments. In addition to these, the students should wire the other circuits explained within the text.

3. The problem involving agent 070 in Section 9 can be approached by circuits as mentioned in the text. For the two cases (1) agent 070 observes the garage door closed, (2) agent 070 observes the garage door open, the student should list the possibilities under the circuit diagram:

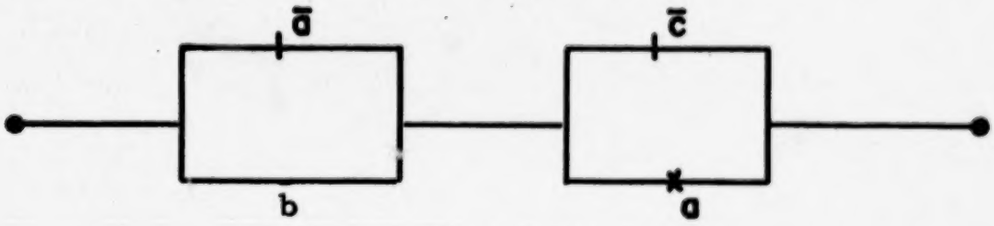

Fig. 16(b)

In this first case, the circuit will be closed if the car is in the garage or if Jones is not at home. In other words, if the car is in the garage it does not matter whether Jones is home or not, the circuit is closed. Therefore, agent 070 cannot tell whether Jones is at home.

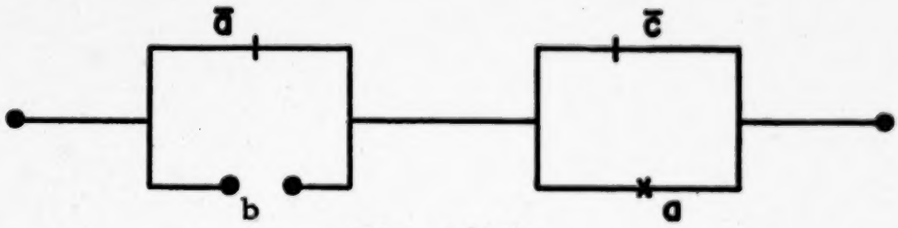

Fig. 16(c)

In the second case, for the circuit to be closed, Jones must be not home ($\bar{c}$ is closed) and the car must not be in the garage ($\bar{a}$ is closed). Notice that this is the only way for the entire circuit to be closed. Therefore, agent 070 can tell that Jones is not home and the car is not in the garage.

V. Homework problems and answers

Relative difficulty of questions found in Chapter A-2:

EASY		MODERATE		DIFFICULT	
*2.2	*2.3	2.1	*2.4	*2.11	2.14
2.6	2.7	2.5	*2.8b		
2.12		2.8a	2.9		
		2.10	*2.13		

*Key Problems to be Attempted by all Students

SOLUTIONS:

2-1 A door lock is to be operable only when time switch T and manual switch M are both activated. Draw the circuit from the components shown below

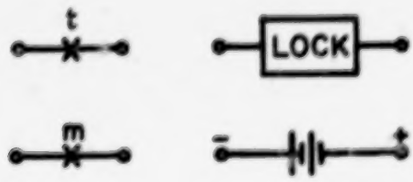

Ans.:

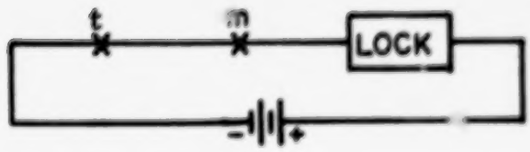

2-2 A single house electric bell is to be operated when either the front or rear door push buttons are operated. Draw the wiring diagram.

Ans.:

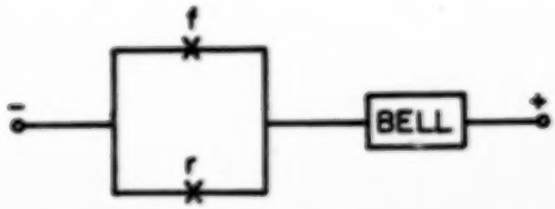

2-3 Review the seat ejection problem in Section 2. Complete the truth table for the circuit in Fig. 4.

Ans.:

A	B	CANOPY CHARGE	SEAT EJECTION
0	0	0	0
0	1	1	0
1	0	1	0
1	1	1	1

2-4 The figure below shows a circuit which is to be analyzed.
(a) Construct and complete a truth table for the network.
(b) Compare the truth table with that of Problem 1-4.
(c) Which of the following is a correct description of the circuit; and; or; odd-parity; even-parity?

Ans.: (a)

a	b	
0	0	0
0	1	1
1	0	1
1	1	0

(c) This is an odd-parity circuit

Part (b) requires no written answer

2-5 Describe one or more situations which might require the operation of three contacts in series.

Ans.: Control of any device, the activation of which requires a consensus of three people. Firing of an ICBM by three controllers; making a call by dial phone; etc.

2-6 Describe one or more situations which might require the operation of three contacts in parallel.

Ans.: Control of door-bell or fire alarm from three positions.

2-7 Construct and complete a truth table for
(a) Fig. 9(a)
(b) Fig. 10(a)
(c) Fig. 10(c) (optional).

Ans.:

a	b	
0	0	0
0	1	1
1	0	1
1	1	0

(a)

(b)

a	b	c	
0	0	0	0
0	0	1	1
0	1	0	1
0	1	1	0
1	0	0	1
1	0	1	0
1	1	0	0
1	1	1	1

(c) The truth table for Fig. 10(c) has 64 lines; the entries in the table are 1 when, and only when, the number of 1's in the set of values of a, b, c, d, e and f is odd.

This part is probably more time-consuming than you will care to demand.

2-8 Define odd-parity as used in contact network analysis. Define even-parity as used in contact network analysis.

Ans.: An <u>odd</u>-parity contact network is one which is closed if and only if an <u>odd</u> number of the associated switches is operated. (<u>Even</u>-parity is defined in an analogous way.)

2-9 Construct and complete a truth table for the network shown below.

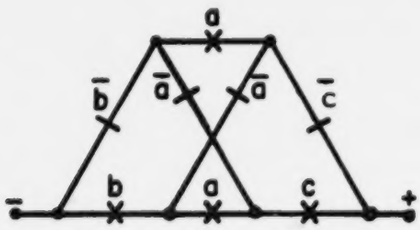

Ans.: Truth table is the same as the one for Prob. 1-7.

2-10 A board of trustees for the Last National Bank consists of four voting members. All loans must be approved by at least three of the board members before it is accepted. The members wish to vote in secret but wish to know if any three or more members voted yes. Below you will find a contact network for this "at least 3 out of 4" vote problem.

(a) What three contacts should be placed in the bottom branch of this network so that the network is completely specified?

(b) Are any other branches in parallel necessary? If so, why?

(c) Draw two other networks that have fewer contacts and which will do the same job.

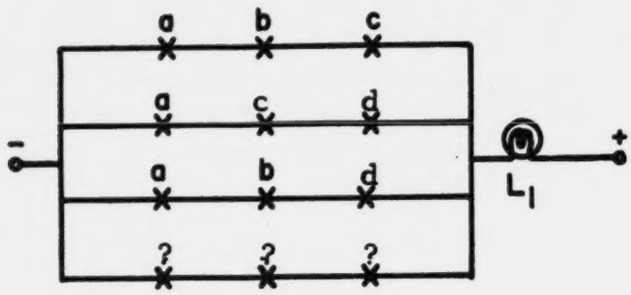

Ans.: (a) contacts "b", "c" and "d".

(b) No

(c)

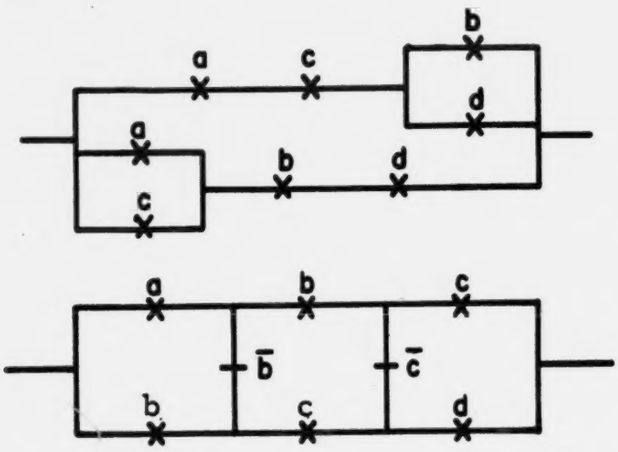

2-11 Describe one or more situations where a majority circuit would be appropriate.

Discussion question.

2-12 (a) Complete the truth table for the contact network shown below.

(b) How many switches must be operated in order to light only L_1?

(c) How many switches must be operated in order to light only L_1 and L_2?

(d) How many switches must be operated in order to light all three lamps?

(e) Does the order in which the switches are operated determine which lamps will be lighted?

(f) Can you think of a real-life situation in which this circuit might be used?

NETWORK

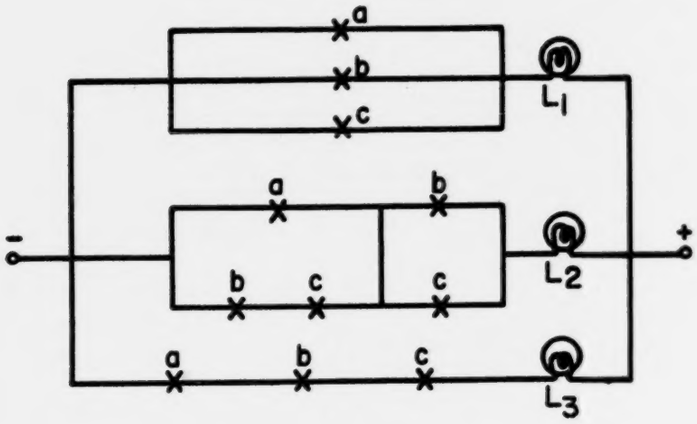

Ans.:

TRUTH TABLE

a	b	c	L_1	L_2	L_3
0	0	0	0	0	0
0	0	1	1	0	0
0	1	0	1	0	0
0	1	1	1	1	0
1	0	0	1	0	0
1	0	1	1	1	0
1	1	0	1	1	0
1	1	1	1	1	1

(a)

(b) One
(c) Two
(d) Three
(e) No

(f) Any counting circuit (up to 3). Any situation in which the desired outcome is independent of the sequence of operations, as in the case of the seat ejection problem.

2-13 Districts I, II and III combined to form a regional school with each district having two members on the Board of Education. Action by the board required a majority vote by district. A negative vote by one representative of a district acts as a veto on a positive vote by the other representative. Design a circuit which will permit secret voting by individuals. Use a lighted lamp to indicate affirmative action by the board.

Ans.:

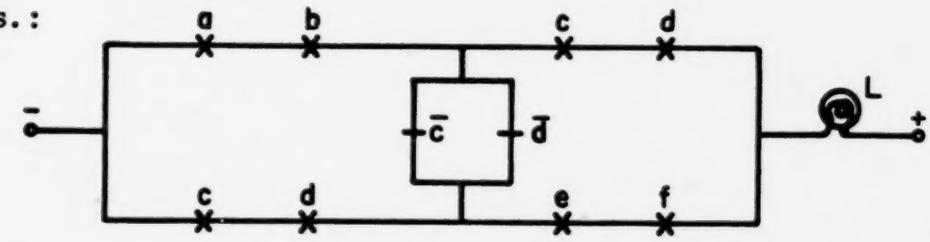

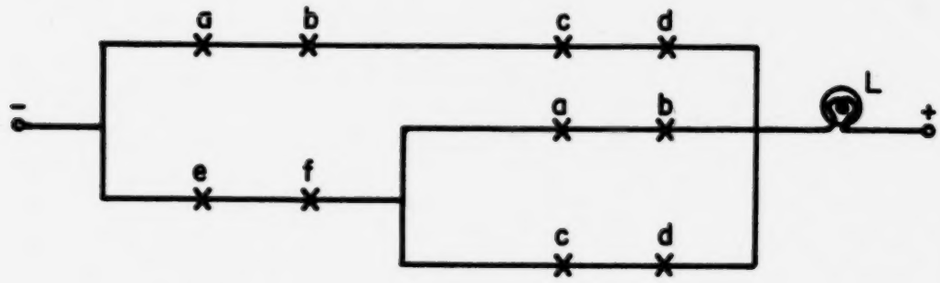

VI. Quiz and/or Test Questions with Answers

1. Construct a truth table for this circuit.

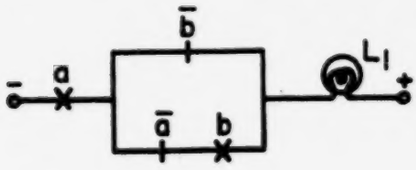

Ans.:

a	b	L_1
0	0	0
0	1	0
1	0	1
1	1	0

2.

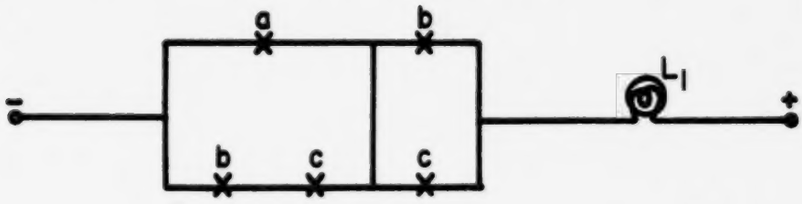

a) Construct truth table for above circuit.

b) From the truth table write the statement using the connectives "and" and "or" as to which switches must be operated to make the lamp light.

Ans.: a.

A	B	C	L_1
0	0	0	0
0	0	1	0
0	1	0	0
0	1	1	1
1	0	0	0
1	0	1	1
1	1	0	1
1	1	1	1

b. The lamp will light if A and B are operated OR
if switches A and C are operated OR
if switches B and C are operated OR
if switches A, B, and C are operated

3.

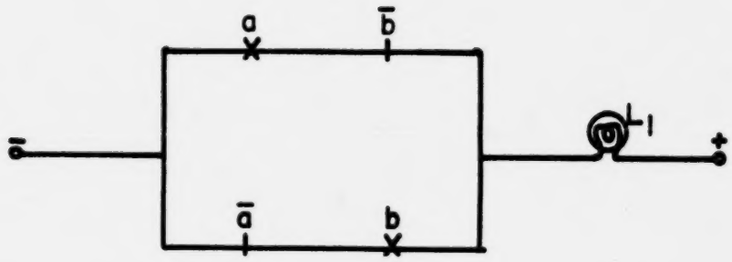

a) L_1 = 1 when _____

b) If contacts a and $\bar{a}$ were removed from the contact network, what should happen to L_1?

c) Give this circuit a name. _____

Ans.:

a. A = 1 and B = 0 or
A = 0 and B = 1

b. The lamp L_1 would be lighted
and could not be turned off

c. Two variable odd parity circuit

4. We speak of a switch or relay as being "operated" or "released," and of contacts as being either of the "_____" or "_____" type, respectively.

Ans.: "make" or "break"

5. Of four chemicals A, B, C, and D; if A is mixed with B there will be a violent explosion. If B is mixed with C or D, poisonous gases are released. Design a circuit to help you test which combinations of these chemicals can safely be mixed in pairs. Briefly indicate how this circuit would help you.

Ans.: Specifications

0 = Chemical is not used
1 = Chemical is to be used
Switch A corresponds to chemical A, B to B, etc.
L_1 is a warning light which indicates that the proposed combination is dangerous.

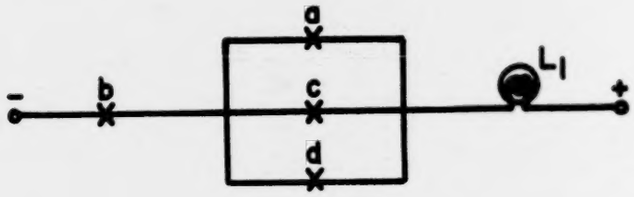

6. Draw a diagram to show a majority-vote circuit (which will light a lamp) for the case where there are four voters.

Ans.:

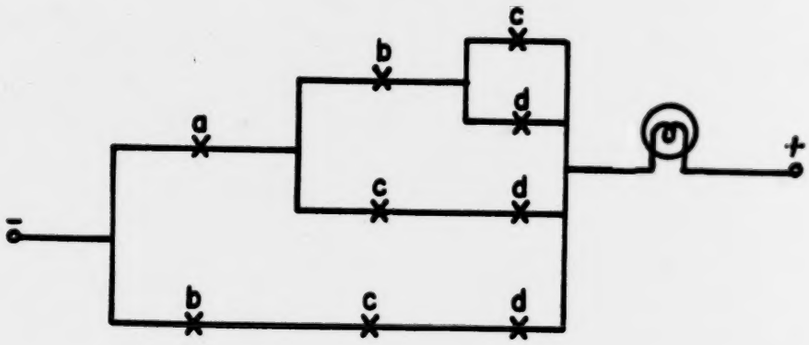

7. Will the following circuit operate to show a majority vote? Explain briefly.

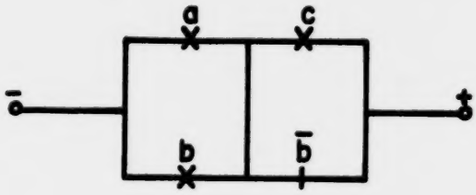

Ans.: No: circuit will not supply a path for affirmative votes by A and B.

VII. Supplementary Materials

A. Hoernes and Heilweil - Introduction to Boolean Algebra and Logic Design - McGraw-Hill.

B. Hollingdale and Tootill - Electric Computers-Pelicon

C. G. E.: You and the Computer - General Electric Co. (Classroom quantities available from: Educational Relations, General Electric Co., Schenectady, N. Y.)

D. Lytel - The ABC of Boolean Algebra - Bobbs-Merrill Co.

VIII. Material for Depth

A. Extension of discussion of formal logic

1. TWO MORE LOGICAL CONNECTIVES

a. "If---then---"

What conclusions can you reach if I tell you "If I smoke cigars then gorgs can play the cello"? That is, for which of the four possibilities of truth and falsity of the two components of the statement could you logically conclude that the statement is true? If I do smoke cigars and gorgs can play the cello you should believe the statement. But if I smoke and gorgs cannot play the cello the statement is false. These conclusions are fairly easy to reach. But what if it is not true that I smoke cigars? In that case there seems to be no way of deciding whether my statement is true or false. The custom among logicians is to make a completely arbitrary decision and to rule that the statement "If P then Q" is logically true unless P is true and Q is not true. The truth table for the "If---then----" connective (it is called the conditional connective) is displayed in the truth table in Fig. 1.

Fig. 1 A truth table for the if---then connective.

P	Q	"If P then Q"	
false	false	true	arbitrarily chosen
false	true	true	to be "true"
true	false	false	
true	true	true	

In ordinary conversation we use logical connectives to join ideas which we think are somehow related. Logicians do this too, but they also join ideas which seem to bear no causal relationship to each other. This freedom can, on occasion, as we have seen, produce peculiar and unnatural statements. This is especially true when we use the "If---then---" connective. We should keep in mind that a causal relationship is not necessarily intended between the statement components so connected. It is quite difficult to imagine any such relationship between "I smoke cigars" and "Gorgs can play the cello".

When is the statement "I do not smoke cigars or gorgs can play the cello" true and when is it false? Recall that statements containing "or" are false only when both components are false. Consequently, the statement is false only when "I do not smoke cigars" if false (that is, when "I smoke cigars" is true) and when "Gorgs can play the cello" is false. In our shorthand notation we have said that the statement "Not-P or Q" is false only when P is true and Q is false, and it is true for all other conditions.

The remarkable result, which a clever reader might already have noticed, is that the conditions for which "If P then Q" and "Not-P or Q" are true or false are the same. The importance of this fact is enormous. It means that one of the statements we use most in logical arguments can be expressed alternatively using only "not" and "or". An even more remarkable fact is that "not" and "or" can be proved to be sufficient to express all logical statements, however complex they may be. However, statements using only "not" and "or" turn out to be unnecessarily lengthy and usually quite obscure and difficult to understand.

Customarily, logicians use "and", "or" and "not" as the fundamental logical connectives. The convenience of having all three of these available is illustrated in the next section.

b. "----if and only if----"

As a final example of a statement about gorgs and my smoking habits consider "I smoke cigars if and only if gorgs can play the cello". (The phase "if and only if" is called the biconditional connective.) I could just as well have said "If I smoke cigars then gorgs can play the cello, and if gorgs can play the cello then I smoke cigars". These two equivalent statements we shall put into the simpler forms "P if and only if Q" and "If P then Q, and if Q then P". Either one of these declares that if P is true then Q is true and if P is false then Q is false. Therefore the statements are true when P and Q have the same truth-value and are false when they have different values. The truth table in Fig. 2 summarizes these facts.

Fig. 2 A truth table for the if and only if connective.

P	Q	"P if and only if Q"
false	false	true
false	true	false
true	false	false
true	true	true

Another equivalent way of expressing the statement we are studying is "P and Q, or not-P and not-Q". In expanded form: "I smoke cigars and gorgs can play the cello, or I do not smoke cigars and gorgs cannot play the cello". Still another form is "P or not-Q, and not-P or Q". That is, "I smoke cigars or gorgs cannot play the cello, and I do not smoke cigars or gorgs can play the cello". This last version is an awkward one which, although equivalent to all the others, nevertheless sounds quite strange to our ears. It is included in order to demonstrate that there are always several ways to express a logical statement,

even when we are restricted to using the "and", "or" and "not" connectives. This flexibility can be important when we are designing the corresponding logic circuits because it allows us to consider several alternate circuits which will produce the same logical result.

2. AN EXAMPLE OF A PROBLEM IN LOGIC

a. Expressing the problem in symbolic form.

Suppose we try to put together a much more complex example, suitable, say, as a moderately difficult question on an intelligence test.

> "Mr. Jones lives alone in a house which has a garage. Jones fears car thieves; whenever his car is in the garage the garage door is closed. If the garage door is closed and the lights are on in the house it is certain that Jones is at home. If Jones is at home or the lights are off in the house then the car is always in the garage. All of these habits are well known to his neighbors, Mr. and Mrs. Nosey, who live next door". (More about the Noseys later.)

We shall represent our knowledge of the situation by writing a single rather complex statement in logic. The following symbols will be used for the elementary propositions from which this statement is constructed. (Mr. and Mrs. Nosey will ask questions about only these propositions.)

A: Jones is at home.

B: The car is in the garage.

C: The garage door is closed.

D: The lights are off in the house.

There are only three critical sentences in the problem. Extraneous information, such as Jones's fear of car thieves, which are not logically interrelated to the four propositions, will be ignored. Minor rewording of the sentences will be made so that we can use the connectives used earlier.

First: "If the car is in the garage then the garage door is closed." (If B then C.)

Second: "If the garage door is closed and the lights are not-off in the house then Jones is at home." (If C and not-D then A.)

Third: "If Jones is at home or the lights are off in the house then the car is in the garage." (If A or D then B.)

Apparently all of these statements, taken together, are necessary to describe the relationships among the four elementary propositions. Therefore a single statement, in which the three parts are connected by "and's", can be made:

"If B then C, and if C and not-D then A, and if A or D then B." It may seem almost heartless to reduce the information we have about Jones, his car, his garage, and the lights in his house to such a stream of symbols. Nevertheless it

is just such a process which is necessary to express our problem in a form acceptable for presentation to a computer.

b. Deriving the truth table.

The truth table for this statement is another way of showing these data. Since there are four propositions (A, B, C and D) and since each of these has two possible truth-values (true or false) the total number of possible combinations of these values is 2 x 2 x 2 x 2 = 16. These sixteen combinations are shown in the table in Fig. 3. In this table we have written "T" instead of "True" and "F"

Fig. 3 A truth table for the three statements comprising the "Jones" problem.

A	B	C	D	1st statement	2nd statement	3rd statement
F	F	F	F	T	T	T
F	F	F	T	T	T	F
F	F	T	F	T	F	T
F	F	T	T	T	T	F
F	T	F	F	F	T	T
F	T	F	T	F	T	T
F	T	T	F	T	F	T
F	T	T	T	T	T	T
T	F	F	F	T	T	F
T	F	F	T	T	T	F
T	F	T	F	T	T	F
T	F	T	T	T	T	F
T	T	F	F	F	T	T
T	T	F	T	F	T	T
T	T	T	F	T	T	T
T	T	T	T	T	T	T

instead of "False". (For the moment you may ignore the three rightmost columns of the table.)

The first statement was reduced to the symbolic form "If B then C". We have seen that this statement will be false only if B is true and C is false. Otherwise, of course, it will be true. In the truth table, in the column associated with the first statement we have therefore put an "F" in those rows for which the B-column has a "T" and the C-column has an "F" (independent of the values for A and D). A "T" has been put into each of the other rows.

The second statement, "If C and not-D then A", is false only when "C and not-D" is true and A is false. Examining further, we know that "C and not-D" is true only when C is true and D is false. It is only for those rows of the truth table for which A is "F", C is "T" and D is "F", therefore, that we have put an "F" in the column associated with the second statement.

The third statement, "If A or D then B", is false only when "A or D" is true and B is false. Analyzing further, we know that "A or D" is true when either A or D (or both) are true. The rows of the truth table into which an "F" should be

put for this third statement are those for which either columns A or D (or both) have a "T" and column B has an "F".

Finally, we want to determine what the truth table is for the entire statement

"If B then C, and if C and not-D then A, and if A or D then B".

We recall that a series of statements connected by "and's" is true only when all of its components are true. The truth table for the composite statement is given in Fig. 4.

Fig. 4 A truth table for the single composite statement of the "Jones" problem.

A	B	C	D	Statement
F	F	F	F	T
F	F	F	T	F
F	F	T	F	F
F	F	T	T	F
F	T	F	F	F
F	T	F	T	F
F	T	T	F	F
F	T	T	T	T
T	F	F	F	F
T	F	F	T	F
T	F	T	F	F
T	F	T	T	F
T	T	F	F	F
T	T	F	T	F
T	T	T	F	T
T	T	T	T	T

A truth table is a way of visualizing all imaginable states of truth or falsity of the elementary propositions of a problem. Each of the possible combinations corresponds to just one state in the table. For instance, the state in which Jones is at home, and the car is not in the garage, and the garage door is not closed, and the lights are off in the house is represented by the tenth row of the table (the one for which A, B, C and D have the truth-values T, F, F and T, respectively). Even though this state is one of the sixteen states we can imagine before we hear the conditions of the problem, the entry "F" at the right of this row tells us that this state is not one which Jones's neighbors, the Noseys, could ever observe. In fact, for our problem all but four of the sixteen states are excluded by being inconsistent with the facts we have about Jones. Only these four are observable.

c. Getting answers from the truth table.

On Tuesday morning Mr. Nosey looks out of his window and sees that Jones's garage door is open. He tells his wife "Jones is not home". Is he correct in his conclusion?

We have no way of knowing whether or not Mr. Nosey was thinking logically but we can test his conclusion. In our language he was saying "If the

garage door is not-closed then Jones is not at home". (How can you prove that this statement is equivalent to "If Jones is home then the garage door is closed"?) In our shorthand we state "If not-C then not-A". What Mr. Nosey is really saying is "For the four observable states shown in the truth table A always has the value "F" whenever C has the value "F". Is he correct? We can tell by examining a shortened form of the table (see Fig. 5) which lists only the four observable states

Fig. 5 A listing of the four observable states in the "Jones" problem.

A	B	C	D
F	F	F	F
F	T	T	T
T	T	T	F
T	T	T	T

There is only one observable state for which C has the value "F" and for this state it is true (as Mr. Nosey claimed) that A has the value "F". It is also true that B and D have the value "F". Therefore, Mr. Nosey could have reached an even more detailed conclusion when he saw that Jones's garage door was not closed. In that case not only is Jones not home, but also the car is not in the garage and the lights are not off in the house.

By looking at the four observable states listed we should be able to answer the following question. "Even though Jones always keeps his car in the garage when he is at home, is Jones always at home when his car is in the garage? That is, for the observable states is "If B then A" true? The answer is "No", because it is possible that B can have the value "T" and A can have the value "F".

Another question: "If Jones is at home is the garage door always closed? That is, if A is true is C always true (for the observable states)? (Yes.)

And another: "If the car is in the garage should we expect to find the car door closed?" That is, is C true whenever B is true? (Yes.)

Before going to bed Tuesday night, Mr. Nosey sees that Jones's garage doors are closed and comments to his wife "Jones must be at home". His wife replies "Not necessarily! But I'd agree with you if I could see the light in his house. Who is right? (She is.)

3. ANOTHER VARIATION

Suppose the problem had read as follows: Mr. Jones has very definite habits. Whenever his car is in the garage the garage door is closed, and whenever his garage door is closed one can be sure that the car is in the garage. (This is an "if and only if" situation.) Also, if Jones is at home, his car is always in the garage. Agent 070 drives past and notices (1) at one time that the garage door is open, and (2) at another time that the garage door is closed. What can Agent 070 determine under these two different conditions?

First we write the complete compound logic-statement describing the problem: B if and only if C and if A then B; or restating the former we may put it if B then C and if C then B and if A then B. [It is shorter and simpler with implication symbols: $(B \rightarrow C)$ and $(C \rightarrow B)$ and $(A \rightarrow B)$]. Now these statements can be rewritten using only "and", "or" and "not": $(\bar{B}$ or $C)$ and $(\bar{C}$ or $B)$ and $(\bar{A}$ or $B)$, from which it is easy to derive this switching circuit:

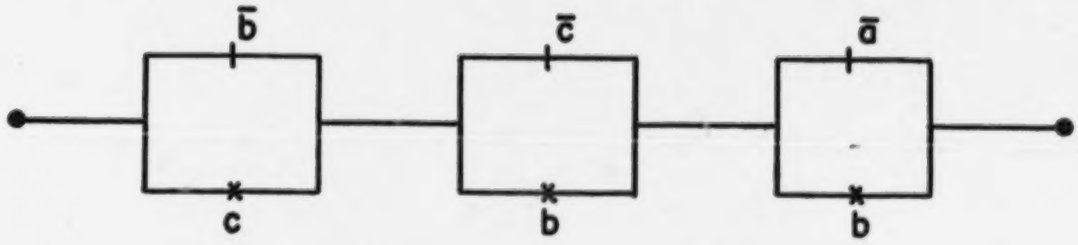

Returning to 070 and his two observations: (1) if the garage door is open (or $\bar{c}$ closed) the circuit becomes

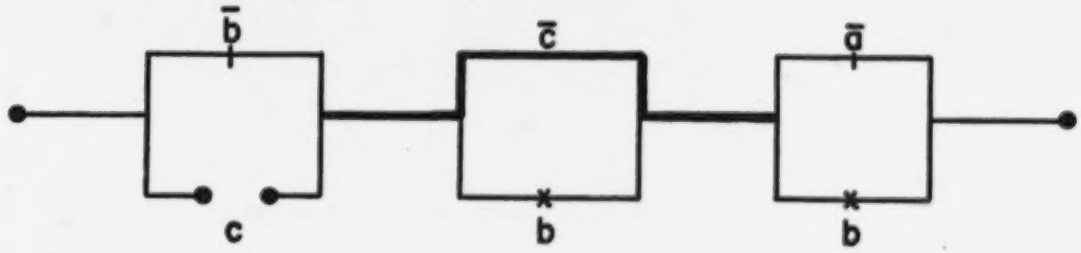

But if the garage door is open ($\bar{c}$ closed) then the car is not in the garage ($\bar{b}$), which develops the circuit to

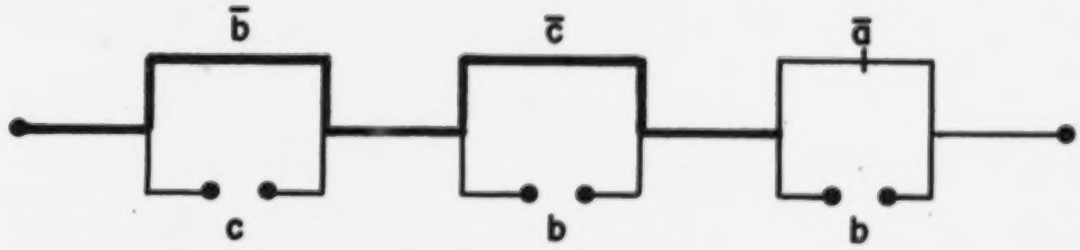

Since switches B and C are determined, the only way to establish a circuit is to have $\bar{a}$ closed. Thus switch A is not operated, and Jones is not home.

(2) If the garage door is closed (c), then

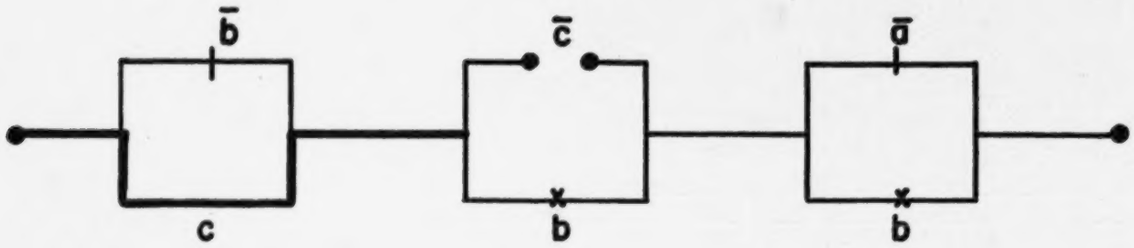

But if the garage door is closed (c), then the car is in the garage (b). Then the circuit looks like the following. Therefore, one cannot tell whether Jones is home or not since it doesn't affect the circuit either way.

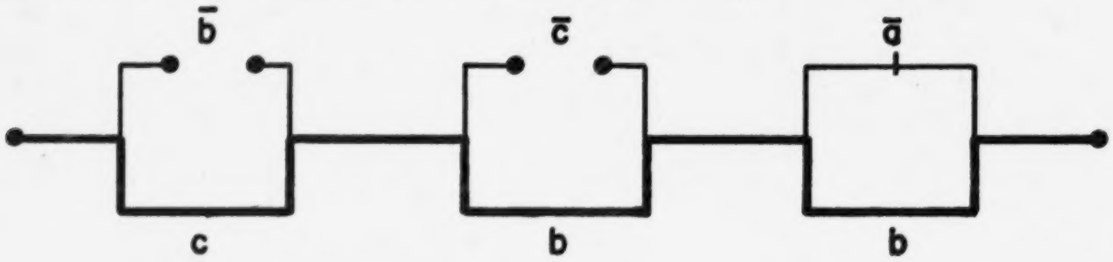

This result is hard to accept at first sight. But a rereading of the conditions shows they do not indicate that Jones and his car must both be home at once. Indeed, if the episode occurred in a detective story the alert reader might well ponder briefly and then think that Jones had tried to establish an alibi with the car-garage bit and had sneaked out the back door, bent on nefarious business. For our purposes, the important point seems to be that the story and the circuits demonstrate the usefulness of the logical convention: a statement in the form "if A, then B" is regarded as <u>true</u> if B is <u>true</u>, regardless of the truth-value of A.

B. Something on Boolean algebra

There are some relationships which we can express in Boolean algebra about the contacts on a switch A, which are valid regardless of the state of the contacts. For example, when we put the contact "a" in series with an open path the result is equivalent to an open path regardless of whether the contact is open or closed. The equation "a. 0 = 0" is shorthand for this statement.

The following four rules are all valid in Boolean algebra.

$$a \cdot 0 = 0 \cdot a = 0 \qquad (1)$$

$$a \cdot 1 = 1 \cdot a = a \qquad (2)$$

$$a+0 = 0+a = a \qquad (3)$$

$$a+1 = 1+a = 1 \qquad (4)$$

The last of these says that "A closed path in parallel with another path is equivalent to a closed path, whatever the state of the other path may be." One good way of checking the truth of this statement is to remember that either a=0 or a=1. If a=0 the rule says that "0+1 = 1+0 = 1", which is certainly true. If a = 1 the rule says

that "1+1 = 1+1 = 1", which is also true for switch contacts in parallel.

Two other rules which are important are:

$$a \cdot a = a \qquad (5)$$

$$a+a = a \qquad (6)$$

By letting a=0 and by letting a=1 you can check to see that these theorems are valid. The two diagrams in Fig. 6 illustrate what these rules mean. They show

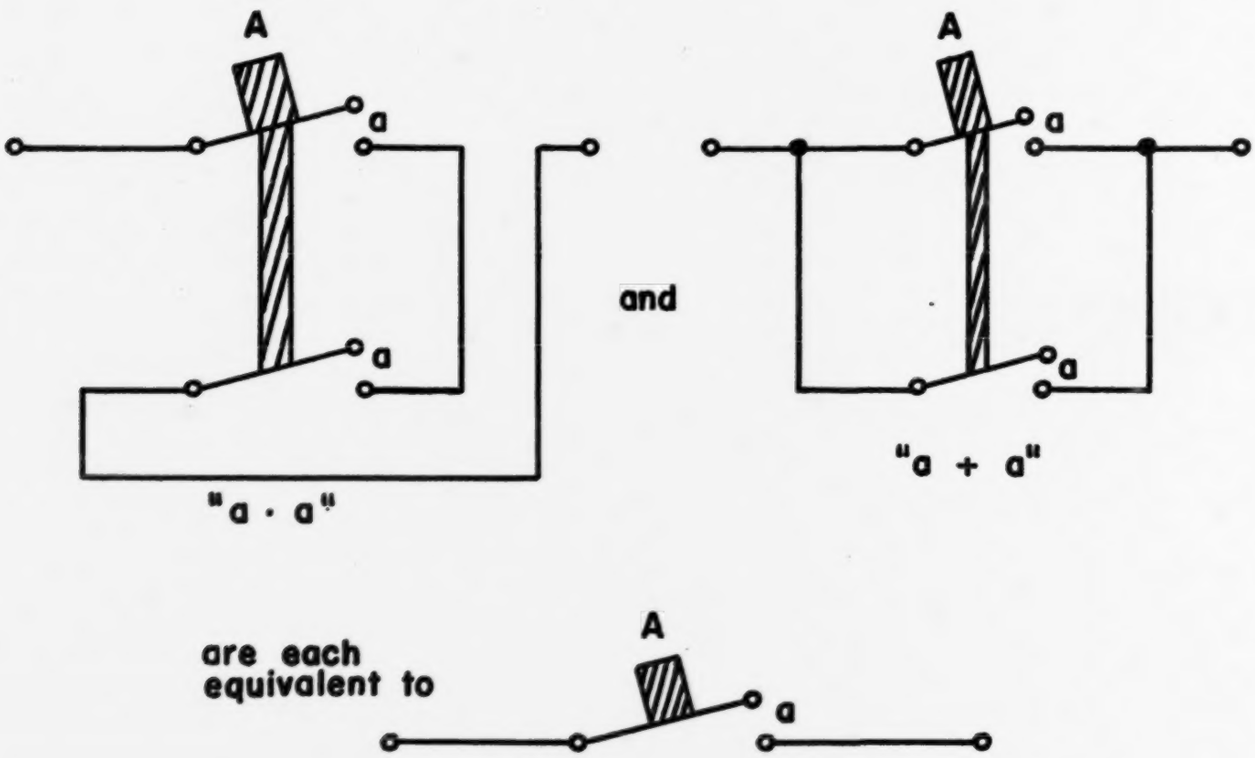

Fig. 6 Demonstration of the theorems "a·a = a" and "a+a = a".

that when two contacts having the same state are placed either in series or in parallel the resulting circuit is equivalent to a single contact having that state.

Fig. 7 The series (or "and") configuration of two contacts. A lamp controlled by two contacts in series.

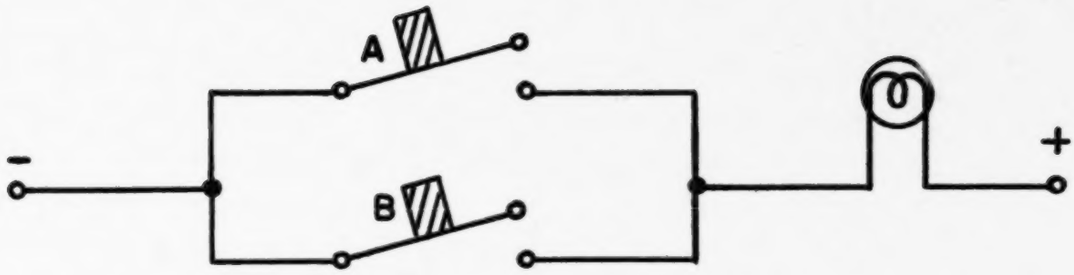

Fig. 8 The parallel (or "or") configuration of two contacts. A lamp controlled by two contacts in parallel.

1. SOME SIMPLE THEOREMS OF BOOLEAN ALGEBRA

By using contacts controlled by more than one switch it is possible to get circuits which can be described by more complicated expressions in Boolean algebra. As a start, notice that the expression which describes the series circuit in Fig. 7 is "a· b", or simply "ab". We know that this expression can have the value "1" only when both "a" and "b" have the value "1". Whenever either "a" or "b" has the value "0" the product has the value "0". The parallel circuit in Fig. 8, on the other hand, is described by "a+b". Whenever either "a" or "b" (or both) have the value "1" the sum has the value "1". Whenever both "a" and "b" equal "0" the sum equals "0".

The circuit diagrams in Fig. 9 show several contact circuits and the expressions in Boolean algebra which can be associated with them. (For simplicity only the contacts themselves have been shown--in a shorthand notation in which a cross represents a contact.) The first pair of examples is particularly worth noting. These are the circuits described by "a(b+c)" and "ab+c". In the first of these the "a" contact is put in series with a parallel circuit consisting of the "b" and "c" contacts. In the second circuit the contacts "a" and "b" are put in series and the resulting series circuit is then put in parallel with "c". How can we tell whether to make the parallel connection first and then the series connection--or whether to make the series connection first and then the parallel connection? In particular, in the expression "ab+c", how do we know that the "b" variable is to be multiplied first (by "a") rather than added first (to "c")?

The rule which tells the answer to questions of this type is that expressions in Boolean algebra are to be handled in exactly the same way that they are in ordinary algebra: whenever parentheses are not present, product operations are to take precedence over summing operations. Parentheses force the operations inside them to be done before the ones outside are. As examples, consider "ab+cd", "a(b+cd)", "(ab+c)d" and "a(b+c)d"; determine the contact circuit associated with each of them.

One of the purposes of any algebra is to tell us when one expression can be replaced by another. One of the rules of ordinary algebra is "a(b+c) = ab+ac" which shows how to "expand" a parenthesized expression. Of course we can use this rule "backwards"; that is "ab+ac = a(b+c)". In this form it tells us that "a" can be factored from the expression.

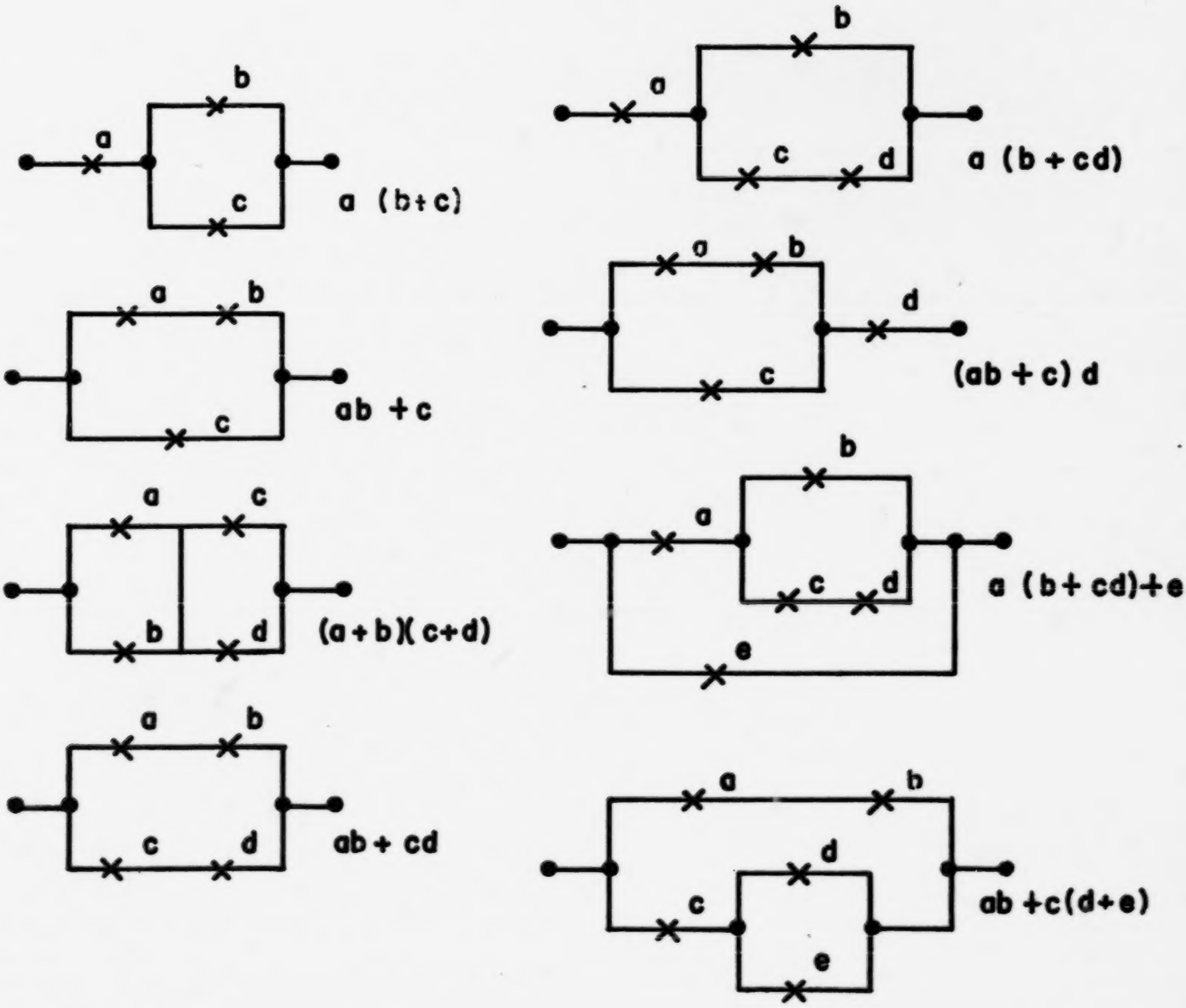

Fig. 9 Some examples of contact networks and the associated expressions in Boolean algebra.

By a lucky accident ("lucky" because the symbols of Boolean algebra do not mean the same things that they do in ordinary algebra) the factoring rule is also valid in Boolean algebra.

$$ab+ac = a(b+c) \tag{7}$$

(This is sometimes called "the first distributive law" of Boolean algebra.) The

proper circuit interpretation of this theorem is given in Fig. 10(a). The two circuits can be shown to be equivalent by noticing that, in either case, when "a"

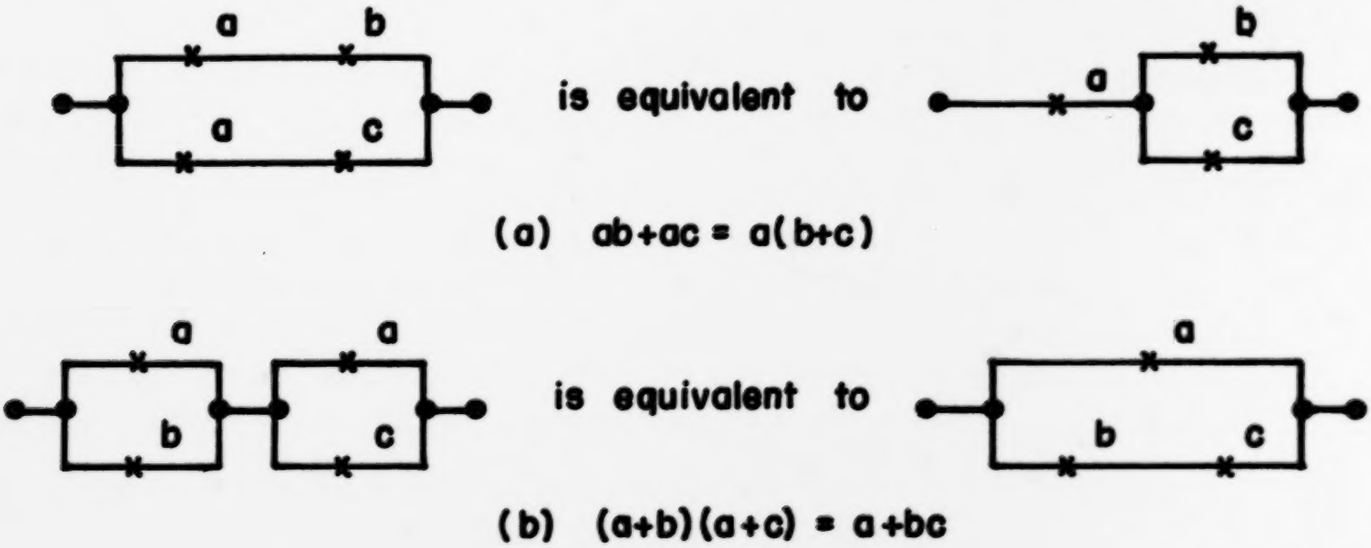

Fig. 10 The two distributive laws of Boolean algebra.

is open the entire circuit is open, regardless of the states of the other two contacts. When "a" is closed there is a path through either circuit whenever "b" or "c" is closed.

Another theorem, very much like the preceding one, is

$$(a+b)\,(a+c) = a+bc \tag{8}$$

This "second distributive law" is like the first one except for the fact that the operations of multiplication and addition have been interchanged. This theorem would not be true in ordinary algebra. But in Boolean algebra it notes the equivalence of the two circuits in Fig. 10(b). In each of this pair of circuits the closing of "a" guarantees that there is a path through the network regardless of the states of the other two contacts. When the "a" contacts are open there are paths completed in the circuits only when "b" and "c" are closed.

Two more theorems which are very useful in simplifying expressions are given by

$$a+ab = a \tag{9}$$

$$a(a+b) = a \tag{10}$$

These are usually called the "absorption" theorems. The pairs of circuits which you should visualize for them are shown in Fig. 11. (Can you give a logical argument that proves the equivalence of these circuits?)

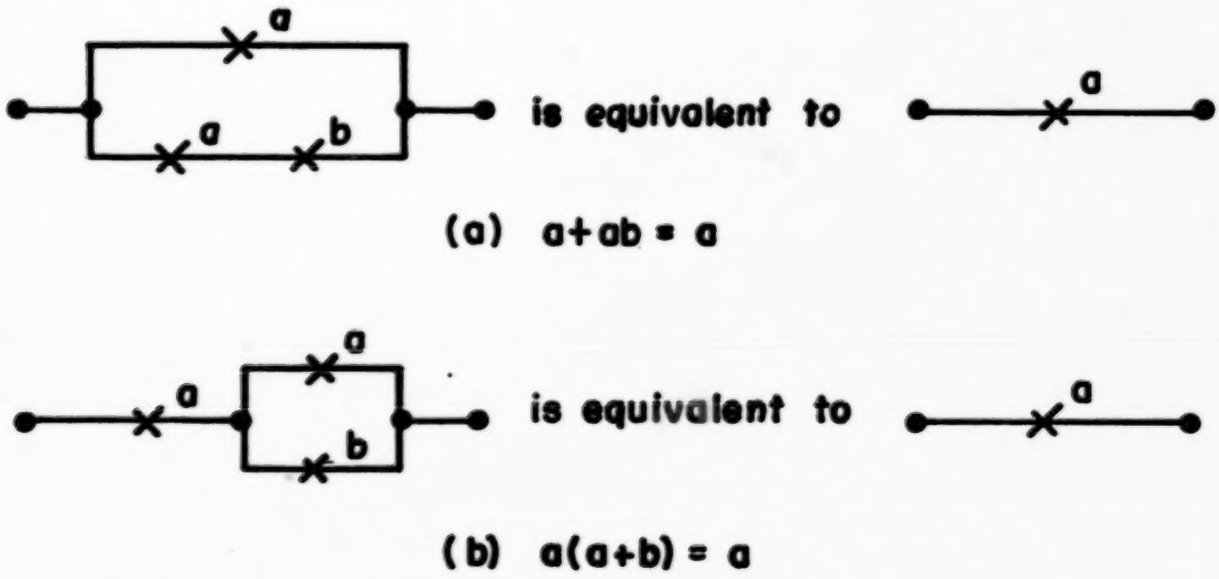

Fig. 11 The two absorptive laws of Boolean algebra

An example: the majority vote problem.

Three legislators wish to vote on a large number of issues and to have their votes anonymous. Each one is to control a switch which is labelled "No" in the released position and "Yes" in the operated position. A lamp indicating that the majority vote is favorable is to be lighted whenever two or three of the members vote "Yes"; otherwise the lamp is to be unlighted. One way of stating these requirements using the "and" and "or" connectives is "The lamp is to be on when (and only when) switches A and B are operated, or when switches A and C are operated, or when switches B and C are operated." (What happens, according to this description, when all three of the switches are operated? Recall that we are using the inclusive "or".) In Boolean algebra the appropriate expression describing the desired contact circuit is "ab+ac+bc". This circuit is shown in Fig. 12(a). (In this circuit what happens when all three of the switches are operated?)

There are several other ways to state the requirements of our circuit. By factoring "a" from the first two terms of "ab+ac+bc" we obtain "a(b+c)+bc". The associated word statement is "The lamp is to be lighted when A is operated and B or C is operated, or when B and C are operated." The circuit is given in Fig. 12(b).

Another, more obscure, but equivalent, form is "The lamp is to be lighted when A is operated, or B and C are operated; and when B or C is operated." The circuit in Fig. 12(c) is a translation of these requirements into physical form.

The expression "(a+bc) (b+c)" can be shown to be equivalent to the others by expanding ("multiplying out") the two parenthesized terms to get "ab+ac+bcb+bcc". We know [from Eq. (5)] that when a pair of identical variables are multiplied together one of them may be eliminated. The application of this rule gives us

"ab+ac+bc+bc". From Eq. (6) we know that when a pair of identical terms are added together one may be eliminated. The application of this rule results in "ab+ac+bc".

(How many other ways can you think of to design a majority circuit using only five contacts?)

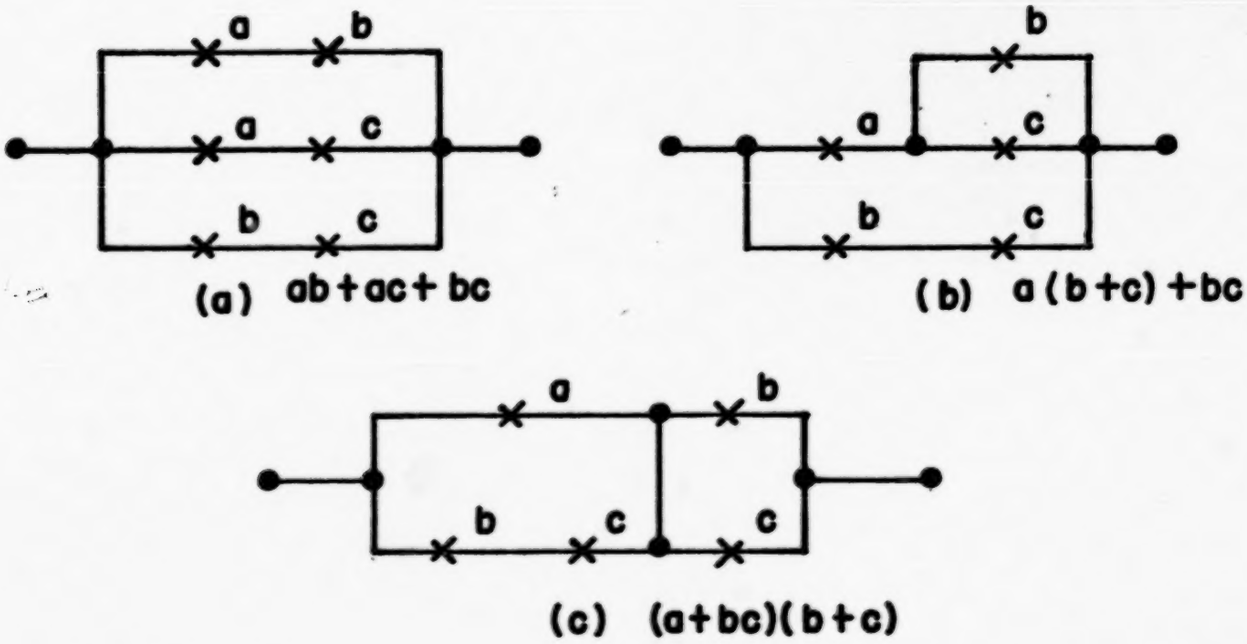

Fig. 12 Three equivalent majority circuits.

2. COMPLEMENTARY VARIABLES.

Definition of complementary variables.

The complementary nature of "0" and "1" can be emphasized by writing explicity that "not-0 is equivalent to 1" and "not-1 is equivalent to 0". The bar notation used to differentiate between the make and break contacts on a switch is also used to represent the word "not".

$$\overline{0} = 1 \tag{11}$$

$$\overline{1} = 0 \tag{12}$$

We can also use the bar over a variable to specify another variable which always has a value complementary to that of the variable which has no bar.

$$\text{Whenever } a = 0,\ \overline{a} = 1. \tag{13}$$

$$\text{Whenever } a = 1,\ \overline{a} = 0. \tag{14}$$

The following theorems tell us what happens when we connect two complementary contacts in series and in parallel.

$$a.\bar{a} = \bar{a}.a = 0 \qquad \text{(series)} \qquad (15)$$

$$a+\bar{a} = \bar{a}+a = 1 \qquad \text{(parallel)} \qquad (16)$$

(Does the first of these remind you of "a and not-a is never true" and the second remind you of "a or not-a is always true"? They should.) Theorem (15) tells us that it is never possible to complete a path through a circuit with a pair of complementary contacts in series. Theorem (16) tells us that whenever a pair of complementary contacts are connected in parallel it is always possible to complete a path through the resulting circuit. The reader should practice using these theorems by writing an algebraic expression for each of the circuits in Fig. 13 and then simplifying each expression as much as is possible.

(Question: What would be meant by $\overline{(\bar{a})}$? What is it equivalent to?)

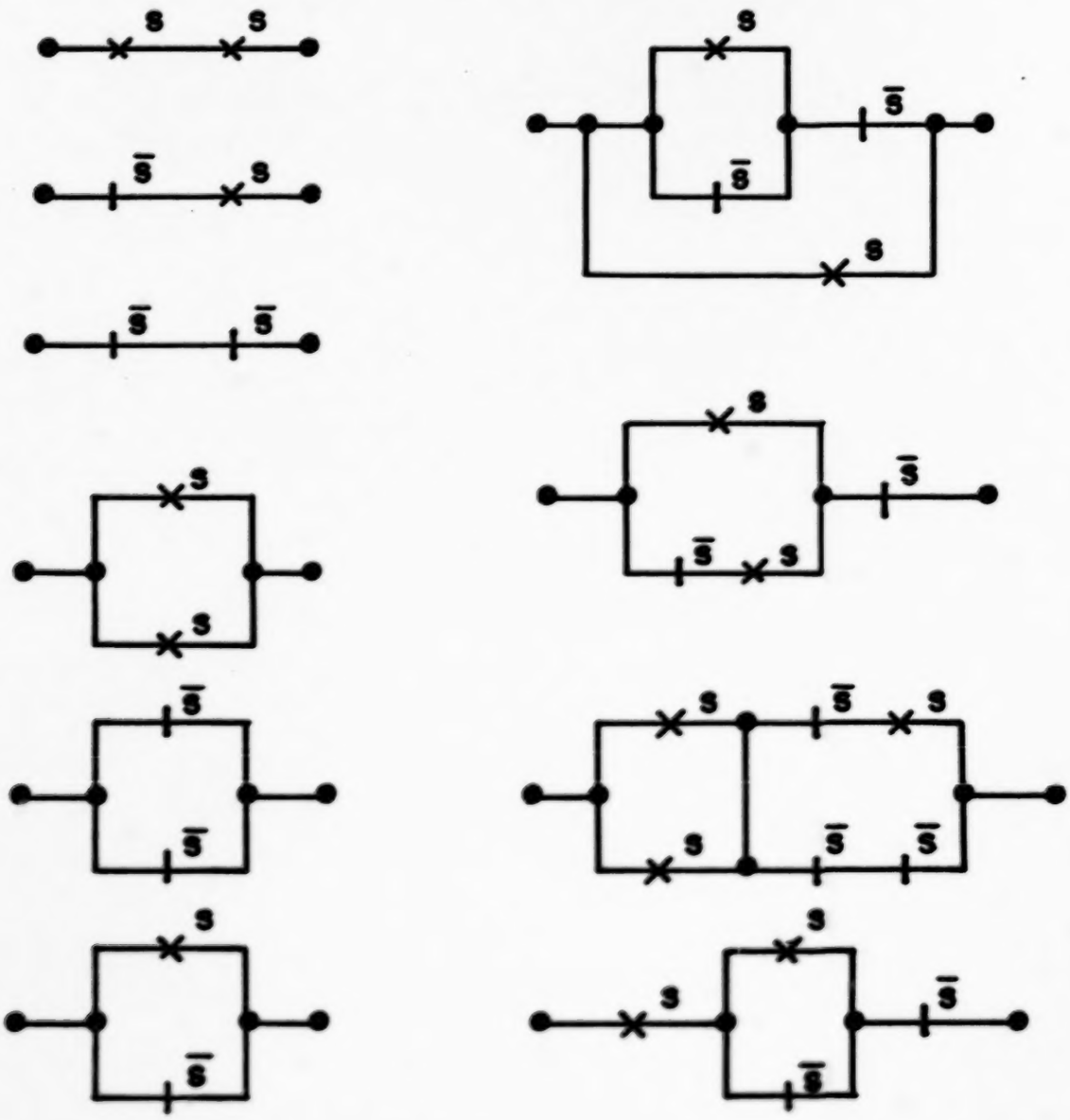

Fig. 13 Circuits with contacts all controlled by the same switch.

Theorems using complementary variables.

There are many other theorems in Boolean algebra. Some of the most important of these are given below.

$$a+\bar{a}b = a+b \tag{17}$$

$$a(\bar{a}+b) = ab \tag{18}$$

$$ab+\bar{a}c = (a+c)(\bar{a}+b) \tag{19}$$

$$(a+b)(\bar{a}+c) = ac+\bar{a}b \tag{20}$$

$$ab+\bar{a}c+bc = ab+\bar{a}c \tag{21}$$

$$(a+b)(\bar{a}+c)(b+c) = (a+b)(\bar{a}+c) \tag{22}$$

The most certain (and often the most tedious) way of proving whether or not <u>any</u> theorem is valid or not is to list what the theorem says <u>for each possible combination of values of the variables.</u> As an example of this technique we shall verify that Theorem (21) is true. We do this by examining the theorem for all eight combinations of values of "a", "b" and "c".

			$(a\cdot b+\bar{a}\cdot c+b\cdot c = a\cdot b+\bar{a}\cdot c)$
a = 0,	b = 0,	c = 0:	$0\cdot 0+1\cdot 0+0\cdot 0 = 0\cdot 0+1\cdot 0$
0	0	1:	$0\cdot 0+1\cdot 1+0\cdot 1 = 0\cdot 0+1\cdot 1$
0	1	0:	$0\cdot 1+1\cdot 0+1\cdot 0 = 0\cdot 1+1\cdot 0$
0	1	1:	$0\cdot 1+1\cdot 1+1\cdot 1 = 0\cdot 1+1\cdot 1$
1	0	0:	$1\cdot 0+0\cdot 0+0\cdot 0 = 1\cdot 0+0\cdot 0$
1	0	1:	$1\cdot 0+0\cdot 1+0\cdot 1 = 1\cdot 0+0\cdot 1$
1	1	0:	$1\cdot 1+0\cdot 0+1\cdot 0 = 1\cdot 1+0\cdot 0$
1	1	1:	$1\cdot 1+0\cdot 1+1\cdot 1 = 1\cdot 1+0\cdot 1$

Notice that all of the theorems of this section (for example, (17) and (18) and many of the earlier ones can be arranged in pairs. If we replace "·" by "+" and "+" by "·" everywhere in the first theorem we get the second theorem of a pair. The relationship of the members of a pair is called <u>duality</u>. For any valid theorem it is always possible to interchange the two operations and obtain an equally valid <u>dual</u> theorem.

How to take the complement of an expression.

Just as it is possible to have a complemented variable with a value opposite to that of the uncomplemented variable, so also is it possible, for any expression, to derive an expression complementary to it. The expressions of such a pair have, for each possible combination of values of their variables, complementary values. The rules for complementing product expressions and sum expressions are illustrated by

$$\overline{(a.b.c)} = \bar{a}+\bar{b}+\bar{c} \tag{23}$$

$$\overline{(a+b+c)} = \bar{a}.\bar{b}.\bar{c} \tag{24}$$

The reader should verify both of these theorems by noting that they are true for all eight combinations of values of the variables.

More complicated expressions may have several "." and "+" operations and several variables (both complemented and uncomplemented). The general rules for converting an expression to the complementary expression are:

(i) Interchange the operations "." and "+", and
(ii) For each variable, x, interchange the variables x and $\bar{x}$.

For example, the complement of "$a(\bar{b}+c)+\bar{a}b$" is "$(\bar{a}+b\bar{c})\ (a+\bar{b})$". The complement of "$(\bar{a}+\bar{b}+c)\ (d\bar{e}+f)$" is "$ab\bar{c}+(\bar{d}+e)\bar{f}$".

The usefulness of being able to recognize the complement of an entire expression is that then the theorems can be applied to a far wider set of situations. This is true because a theorem which is true when its variables represent individual contacts is also true when several or all of these variables are replaced by more complex expressions which represent networks of contacts. For example, Theorem (16) ("$a+\bar{a}=1$") tells us that "$a(\bar{b}+c)+\bar{a}b \quad + \quad (\bar{a}+b\bar{c})\ (a+\bar{b}) = 1$".

The representation in Boolean algebra of a problem in logic

A good example of the use of the theorems we have listed is in simplifying the statement by which we described the conditions of the "Jones" problem in page A-2.13. In symbolic form that statement was

"If B then C, and if C and not-D then A, and if A or D then B." We recall (page A-2.12) that "If P then Q" is equivalent to "Not-P or Q". We can make this substitution in the three places possible in the statement.

(i) "If B then C" becomes "Not-B or C"
(ii) "If C and not-D then A" becomes "Not-(C and not-D) or A"
(iii) "If A or D then B" becomes "Not-(A or D) or B"

In the form of expressions in Boolean algebra these become

(i) $B + C$
(ii) $\overline{(C\bar{D})} + A$ or, equivalently, $\bar{C} + D + A$
(iii) $\overline{(A + D)} + B$ or, equivalently, $\bar{A}\bar{D} + B$

The overall statement of the "Jones" problem included all three components joined by the logical connective "and". Recall that "and" corresponds to ".". Therefore the Boolean expression associated with the composite statement of the problem is

$$(\bar{B} + C)\ (\bar{C} + D + A)\ (\bar{A}\bar{D} + B)$$

We shall see that this can be greatly simplified. First, "multiply out" the last two parenthesized terms. This gives

$$(\bar{B} + C)\ (\bar{C}\bar{A}\bar{D} + \bar{C}B + \underline{D\bar{A}\bar{D}} + DB + \underline{A\bar{A}\bar{D}} + AB)$$

The two underlined terms are always equal to zero (why?) and can be eliminated. If we multiply out again the result is

$$(\bar{B}\,\bar{C}\,\bar{A}\,\bar{D} + \underline{\bar{B}\,\bar{C}\,B} + \underline{\bar{B}\,D\,B} + \underline{\bar{B}\,A\,B} + \underline{C\,\bar{C}\,\bar{A}\,\bar{D}} + \underline{C\,\bar{C}\,B} + C\,D\,B + C\,A\,B)$$

Again the underlined terms can be eliminated. The result can be rewritten as

$$\bar{A}\,\bar{B}\,\bar{C}\,\bar{D} + B\,C\,(A + D)$$

This expression tells us which combinations of values of the variables are allowable, just as the original sequence of three logical statements did.

An interesting application of Boolean algebra may be seen in the circuit of Fig. 11, p. A-13 of the TML. Here the origin of the problem is a somewhat unusual cubic equation, which gives positive integral values of y (all less than 63) for integral values of x between 0 and 7. The desired truth table can then be worked out by evaluating y for each value of x. Next each column of the truth table is written as a Boolean expression and simplified, and the circuit emerges. It will be observed that any integral value of the constant term between 15 and 42 could be used in the same way as 19; the truth table in each case would be different, but could readily be reduced to a more or less complicated network.

Chapter A-3
BINARY NUMBERS AND LOGIC CIRCUITS

I. Approach

This chapter is primarily a discussion of the binary number system, its relation to the decimal system and more importantly its application to elementary logic circuits. The teacher should give the student facility in converting back and forth between the two systems. (For many students, this will take them back to their junior high school mathematics - where they may have had a "modern math" program.)

The teacher should also teach binary addition (subtraction optional -- since it is not needed) and show the relationship between truth tables and the binary digits using elementary logic circuits. (The use of · and + for AND and OR is optional).

The material in the chapter continues with a discussion of a relay and by combining a majority circuit and an odd-parity circuit, the design of a binary adder. As mentioned in A-2, the teacher should have the students spend as much time as possible with the L. C. B. in class.

II. Major Ideas

A. The binary number system.

B. The relationship of the binary number system to the decimal system.

C. The method of converting from decimal to binary and vice-versa.

D. The development and use of the "tree" circuit.

E. The development and use of the circuit which compares the absolute values of two integers.

F. Elementary arithmetic in the binary system.

G. Explanation and use of relays.

H. The use of relays in designing the binary adder.

I. The combining of the "majority" circuit and the "odd-parity" circuit in building the binary adder.

III. Objectives

A. To have the student be able to convert from decimal to binary (and vice-versa) and be able to add in binary.

B. To have the student be able to build a "tree" circuit, a circuit which compares absolute values of two integers, the "odd-parity" circuit, the "majority circuit" and finally the circuit required for the binary adder.

C. To give the student a knowledge of the uses of relays in contact networks.

IV. Development

In the beginning of the chapter, the teacher can include within the explanation of the binary number system itself, the relationship of the binary system with the decimal system, the method of converting from decimal to binary (and vice-versa), and simple binary addition. This can be thought of as a binary arithmetic "package" and the teacher should try to teach it as a whole rather than as sub-topics.

A simple but very effective algorithm for the procedure explained at the end of Section 2 is as follows:

To convert the decimal number 117 to binary, perform successive divisions by 2, listing the remainder at the right.

		Remainder
2	117	
	58	1
	29	0
	14	1
	7	0
	3	1
	1	1
	0	1

When the last quotient is zero, read the remainder column up from the bottom. This is the number in binary — 1110101.

This algorithm can be done very quickly and is not really a "gimmick" approach but rather represents an effective teaching device in terms of the theory of converting from decimal to binary.

The teacher should be sure the students understand the operation of a relay and the idea that it can be used as a device for having one contact network control another contact network. A simple problem to set would be to design a system to use in a subway car, where a local battery is connected to two or three lights whenever the main power goes off and the regular lights go out.

After a discussion of the binary number system and relays, as much class time as possible should be spent by the teacher and students in wiring on the L. C. B. the circuits listed in the chapter.

V. Homework Problems and Answers

Relative difficulty of questions found in Chapter A-3:

EASY	MODERATE	DIFFICULT
*1, *2	*3, 5	6, 7
*4, 12	*8, *9	15
13	10, 14	

*Key Problems to be Attempted by all Students

3-1 Convert the following binary numbers to decimal form.

11 → 3	10000 → 16
101 → 5	110010 → 50
110 → 6	11010 → 26
1011 → 11	1100100 → 100
1010 → 10	1111101000 → 1000

3-2 Convert the following decimal numbers to binary form.

1 → 1	15 → 1111
8 → 1000	16 → 10000
4 → 100	31 → 11111
2 → 10	32 → 100000
9 → 1001	27 → 11011

3-3 Convert the following decimal numbers to binary form. Use the technique illustrated in Section 2.

73 → 1001001	527 → 1000001111
119 → 1110111	512 → 1000000000
237 → 11101101	256 → 100000000

3-4 Add the following pairs of numbers. Perform the addition in binary arithmetic, and express the answer in binary form.

100 + 11 = 111
101 + 11 = 1000
1000 + 1000 = 10000

3-5 Perform the following binary addition. Check your work by converting the numbers to decimal form.

1010 + 110010 = 111100
1011 + 11010 = 100101

3-6 Perform the following binary subtraction. Check your work as in Problem 3-5 above.

100 - 11 = 01
1010 - 101 = 101
110011 - 11010 = 11001

3-7 Perform the following subtractions, and check your work.

1100100 - 11010 = 1001010
11010 - 110100 = - 11010

3-8 Refer to Section 5 and Fig. 4.
(a) What is the meaning of the subscripts on the switch letters in Fig. 4?
(b) For the following pairs of numbers, which lamp will light? Why?
(1) A = 1010
B = 111
(2) A = 1010
B = 1100
(3) A = 1010
B = 1010

Ans: (a) The subscripts indicate the weight associated with the corresponding digit of the indicated binary number. For instance, b_4, has a value corresponding to the digit of weight 4 in the binary number B.

(b)

a_8	a_4	a_2	a_1	b_8	b_4	b_2	b_1	L_1	L_2	L_3
1	0	1	0	0	1	1	1	1	0	0
1	0	1	0	1	1	0	0	0	0	1
1	0	1	0	1	0	1	0	0	1	0

3-9 Explain the function of
(a) the first left-hand section of the binary adder in Fig. 10;
(b) the first right-hand section of Fig. 10.

Ans: (a) It is an "And" circuit which generates the digit C_2 carried to the second adder stage.
(b) It is an "odd parity" circuit which generates the sum digit S_1 for the first adder stage.

3-10 Construct and complete [for Fig. 10] a truth table for
(a) the left-hand section of the first stage;
(b) the right-hand section of the first stage.

Ans:

a	b	C_2	S_1
0	0	0	0
0	1	0	1
1	0	0	1
1	1	1	0

3-11 Name one application of a tree circuit.

Ans: As a circuit which connects a common terminal to one of 2^n other terminals under the control of an n-place binary number.

(This is a good place to point out to your class that a tree circuit can be used for coding or addressing in a computer).

3-12 Study Fig. 1. Can you find a closed path between lamps 6 and 8 for any state of the switches? Between any other pair of lamps?

Ans: No. There are no paths between any pairs of *terminals for any state of the switches.*

(Question should be discussed briefly in class).

3-13 (a) Complete the truth table for the two networks shown below.
(b) For each determine a simplified network which has the same truth table.

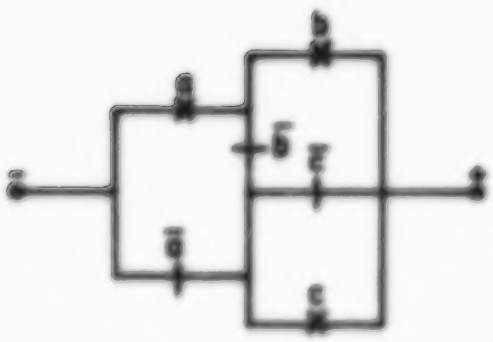

NETWORK SC

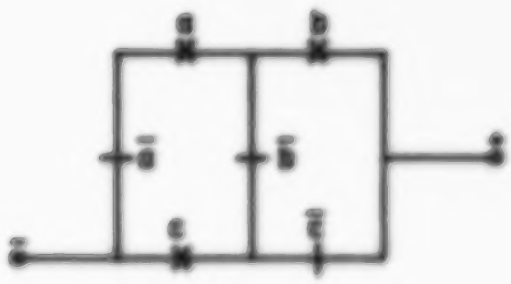

NETWORK OC

Ans: (a)

a	b	c	SC	OC
0	0	0	1	0
0	0	1	1	0
0	1	0	1	0
0	1	1	1	0
1	0	0	1	0
1	0	1	1	0
1	1	0	1	0
1	1	1	1	0

(b)

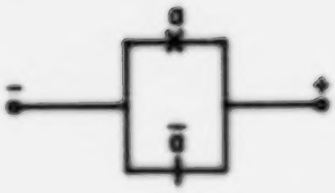

SC

OC

3-14 A general rule is illustrated in the six networks shown below. Find the rule by completing the truth tables and use it to get a network for column Z of the last truth table. (Hint: Your rule will need the words "series", "parallel" and "not".

In statement of problem, place a period after Z and delete the words "of the last truth table".

NETWORK S

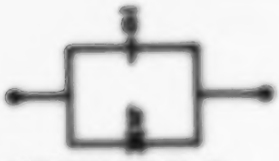

NETWORK T

Ans.:

a	b	S	T
0	0	0	1
0	1	0	1
1	0	1	0
1	1	0	1

NETWORK Y

NETWORK Z
(Draw this Network)
(See below for Ans.)

a	b	c	Y	Z
0	0	0	0	1
0	0	1	1	0
0	1	0	0	1
0	1	1	1	0
1	0	0	1	0
1	0	1	1	0
1	1	0	0	1
1	1	1	1	0

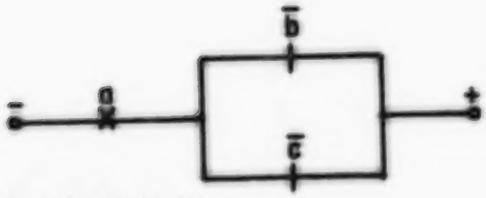

NETWORK W

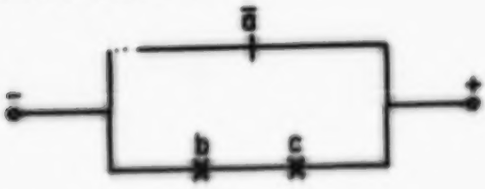

NETWORK X

a	b	c	W	X
0	0	0	0	1
0	0	1	0	1
0	1	0	0	1
0	1	1	0	1
1	0	0	1	0
1	0	1	1	0
1	1	0	1	0
1	1	1	0	1

NETWORK U

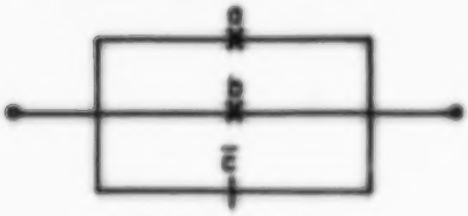

NETWORK V

a	b	c	U	V
0	0	0	0	1
0	0	1	1	0
0	1	0	0	1
0	1	1	0	1
1	0	0	0	1
1	0	1	0	1
1	1	0	0	1
1	1	1	0	1

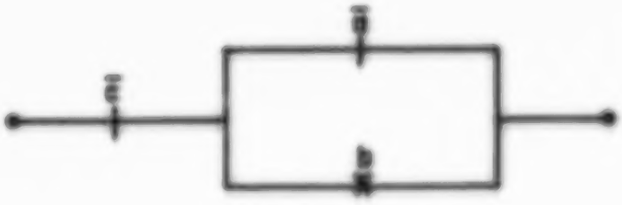

NETWORK Z

3-15 Derive a truth table for each of the two networks shown below. For each determine a less complicated network which has the same truth table.

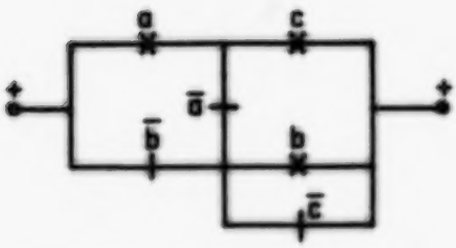

NETWORK NO. 1

NETWORK NO. 2

Ans.:

a	b	c	No. 1	No. 2
0	0	0	1	0
0	0	1	1	0
0	1	0	0	1
0	1	1	0	1
1	0	0	1	0
1	0	1	1	0
1	1	0	0	1
1	1	1	1	0

NO. 1:

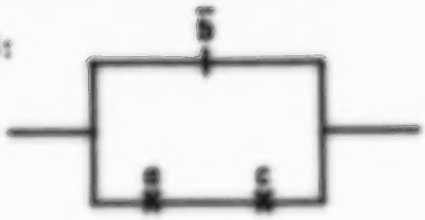

NO. 2:

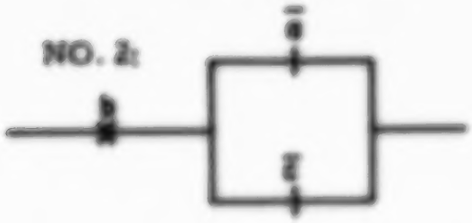

VI. Quiz and test questions with answers for Chapter A-3.

TEST FOR CHAPTER A-3

1. a) Express 127_{10} in binary notation.

127_{10} = _____ 2.

b) Express 1011010_2 in decimal form.

1011010_2 = _____ 10.

Ans.:

1. a. 111111
   b. 90

2. Perform the following binary operations:

a) Add: 110110 + 101101 = _____

b) Subtract: 101101 - 10111 = _____

Ans.:

2. a. 1100011
   b. 10110

3. With six lamps on the L. C. B. what is the largest number that can be represented? _____

Ans.:

63

4.

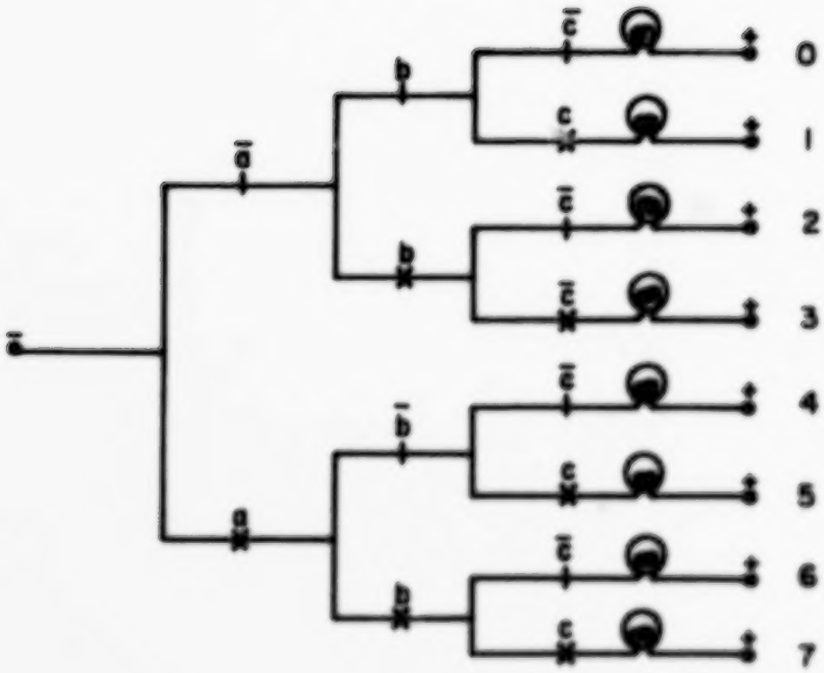

a) If switch A is operated, switch B is operated and C is not operated, what light will be turned on? _____

b) What binary number does this represent? _____

c) If I want to represent the binary number 101, which switches must be operated and which not operated? _____

_____

d) How many contacts are present in the above tree circuit? _____

e) If I have K controlling switches, what would be the general statement as to the total number of contacts needed to operate the circuit?

Ans.:

a. #6

b. 110

c. A = 1; B = 0; C = 1

d. 14

3. No. of contacts = $2[2^k-1]$ or its equivalent

5. Consider the following circuit:

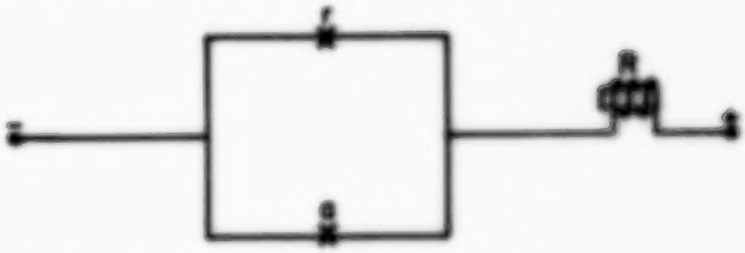

Situation:

Relay R is unoperated <u>and</u> A = 0, then A is set equal to one.

a. Discuss the sequence of events after A goes to the 1 (one) state.

b. Later A goes to the 0 (zero) state. Discuss the sequence of events now

c. What is the purpose of the circuit?

Ans.:

a. The relay is energized causing the contact "r" to close - thus locking the circuit in the "on" position.

b. There is no change in the state of the relay even though contacts "a" are open.

c. This is known as a "holding" circuit. It is a memory circuit.

6. Construct a truth table for this circuit.

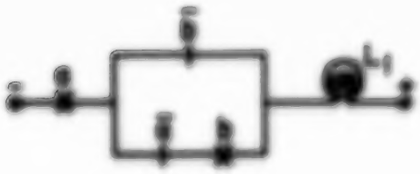

Ans.:

a	b	L_1
0	0	0
0	1	0
1	0	1
1	1	0

7. If we wish to design a circuit which will count to 15, how many stages will be necessary in the counter circuit?

Answer: $2^M - 1$ equals 15.

M equals 4.

8. A circuit called a counter furnishes as its output a set of _____ _____ representing a number.

Answer: Binary digits

9. Which of the following constitutes a feedback circuit?

(a)

(b)

(c) 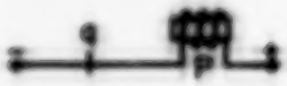

(d) 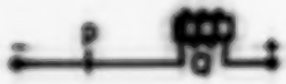

Answer: (a)

10. How many relays are there in each stage of a shift register?

Answer: two.

11.

(a) In the above circuit, what occurs to the relay "Q" if Switch "A" is operated and left in the operable position?
(b) What is this a good example of?
(c) Does it represent stability or instability?

Answers: (a) Relay will energize, then de-energize in rapid sequence, i.e., buzz.
(b) Feedback
(c) Instability

12. Write the decimal number 492 in binary-coded decimal form. (Use four bits per binary equivalent.)

Ans.: 0100 1001 0010

13. Suppose that Principal Palmer decided to assign a binary code number to each of the 800 students at his school. How many bits would be needed in each code number?

Ans.: $800 \leq 2^N$ $N = 10$

14. Is the circuit shown below stable or unstable? _____

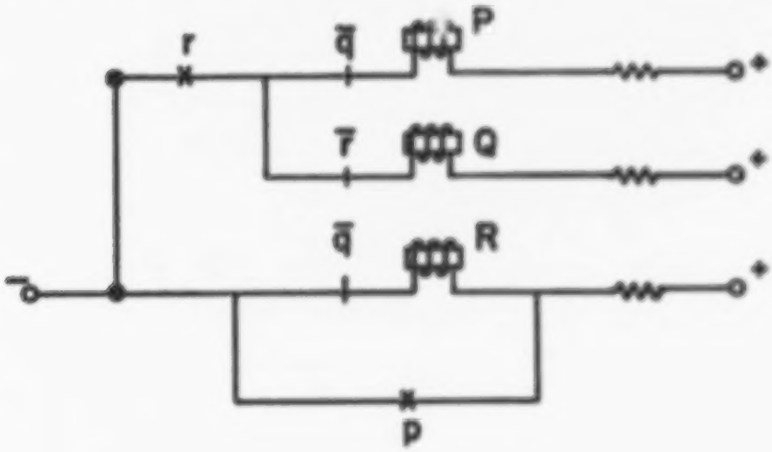

Ans.: Unstable

VII. Supplementary Materials

A. Lytel, The ABC of Boolean Algebra, Bobbs-Merrill Co.

B. _____, The ABC of Computers, Bobbs-Merrill Co.

C. Gillie, Binary Arithmetic and Boolean Algebra, McGraw-Hill

D. Kemeny, Snell and Thompson, Introduction to Finite Mathematics, Prentice-Hall.

VII. Materials for Depth

A. A discussion of fractional numbers in binary

In this text we will represent only integers in the computer which is developed conceptually in Chapter A-5. This is done for purposes of simplicity. The reader should realize, however, that fractional numbers can be represented in the binary number system just as they can be in the decimal system. A "binary point" is used in a manner quite similar to the way we use the familiar "decimal point". In the decimal system digits to the right of the point have weights which are negative powers of 10. For example,

10^3	=	1000	which equals	1000.0000	(base-10)
10^2	=	100	which equals	100.0000	(base-10)
10^1	=	10	which equals	10.0000	(base-10)
10^0	=	1	which equals	1.0000	(base-10)
10^1	=	1/10	which equals	0.1000	(base-10)
10^2	=	1/100	which equals	0.0100	(base-10)
10^3	=	1/1000	which equals	0.0010	(base-10)
10^4	=	1/10000	which equals	0.0001	(base-10)

In the binary system digits to the right of the point have weights which are negative powers of 2. For example,

2^3	=	8	which equals	1000.0000	(base-2)
2^2	=	4	which equals	100.0000	(base-2)
2^1	=	2	which equals	10.0000	(base-2)
2^0	=	1	which equals	1.0000	(base-2)
2^{-1}	=	1/2	which equals	0.1000	(base-2)
2^{-2}	=	1/4	which equals	0.0100	(base-2)
2^{-3}	=	1/8	which equals	0.0010	(base-2)
2^{-4}	=	1/16	which equals	0.0001	(base-2)

B. Subtraction of binary numbers

Binary numbers can be subtracted as well as added. The logic of subtraction is similar to the logic of addition. As in the case of addition, we consider two positive numbers where the smaller number is to be subtracted from the larger. In the usual method of subtraction (with decimal numbers) the smaller number is placed beneath the larger so that the units digits, tens digits etc. of each number are in the same column, and then the lower is subtracted from the upper digit, starting with the units column, moving towards the tens, hundreds, etc. column.

As long as the lower digit (the subtrahend) is smaller than or equal to the upper digit (the minuend), no problem arises. But when the digit in the subtrahend is larger than its corresponding digit in the minuend a special process called "borrowing" must be used to determine the digit which represents the difference digit. In this process we borrow a "1" from the minuend digit immediately to the left and add a "10" to the minuend digit which was initially too small; the overall value of the minuend is not changed by this "borrowing" process since shifting a digit of a decimal number to the right or the left by one position is equivalent to multiplying that digit by 10 or dividing it by 10. Borrowing "1" from any digit in a column and adding "10" to the digit in the column immediately to the right thus makes no overall change in the value of the minuend.

$$\begin{array}{r} 65 \\ -37 \\ \hline \end{array} \quad \text{is the same as} \quad \begin{array}{r} 5\ 15 \\ \cancel{6}\ \cancel{5} \\ 2\ 7 \\ \hline 3\ 8 \end{array}$$

In the binary system of numbers the normal procedure can be used where the subtrahend digit is equal to or smaller than the minuend digit. In the binary system, however, a shift of one column for a borrowed "1" represents a multiplication or division of the borrowed digit by "2" rather than by the "10" of the decimal system. Thus a borrow of a "1" from any digit in a column in a binary number must be cancelled by the addition of a "binary 10" (which is equivalent to a decimal 2) to the digit in the next column to the right. In all other respects the process of subtraction is the same for binary as for decimal systems.

As an example of binary subtraction let us find the difference when the binary 1010 is subtracted from the binary 10011.

$$\begin{array}{r} 10011 \\ -1010 \\ \hline 11001 \end{array} \quad = \quad \begin{array}{r} 0\ 10 \\ \cancel{1}\ \cancel{0}011 \\ -\ 1010 \\ \hline 0\ 1001 \end{array} \quad = \quad \begin{array}{r} 19 \\ -10 \\ \hline 9 \end{array} \quad \text{in decimal notation}$$

In the above problem, it becomes necessary to "borrow" a "binary 1" from the leftmost column in order to permit a subtraction in the adjacent column. When the "borrowed" digit is transferred to the adjacent column it is transferred as a doubled value of "1" and represented in binary terms as "10". The difference between binary "10" and binary "1" is equal to binary "1".

The logic of binary subtraction is summarized in Fig. 7. The above explanation should aid the reader in understanding these tables and the example.

weights:	64	32	16	8	4	2	1	
borrow digits, B:	1	1	0	1	1	1	(0)	
first number, X:	1	0	0	1	0	1	0	(= 74)
second number, Y:	0	0	1	0	1	1	1	(= 23)
difference, D:	0	1	1	0	0	1	1	(= 51)

(a) An example which illustrates the rules.

Arithmetic result of subtracting the digits Y and B from the digit of X	borrow digit	difference digit
minus two	1	0
minus one	1	1
zero	0	0
one	0	1

(b) Rules for determining the borrow and difference digits.

b	x	y	borrow digit	difference digit
0	0	0	0	0
0	0	1	1	1
0	1	0	0	1
0	1	1	0	0
1	0	0	1	1
1	0	1	1	0
1	1	0	0	0
1	1	1	1	1

(c) Table of combinations for the borrow and difference digits.

Fig. 7 Subtraction of two binary numbers

Chapter A-4
LOGIC CIRCUITS WITH MEMORY

I. Approach

This chapter is a continuation of the study of circuits introduced in the two previous chapters. The difference, of course, is that the circuits in this chapter exhibit "memory." While there are very few labs per se, the entire chapter should be taught from a lab point of view. That is, each lesson from the text should be demonstrated by the use of the L.C.B. This demonstration can also serve as a lab exercise for the student. The student, then, should build the circuit himself on the L.C.B.

The class, therefore, should have outlets available every day for work on the L.C.B. In general, about half of each day's class period should be work on the board explaining the circuits and the other half of the period building the circuits.

II. Major Ideas

A. Memory can occur in many simple situations. One of these is when a relay is controlled by one of its own contacts.

B. Circuits may have states which can be changed.

C. The following nomenclature is important and should be strictly adhered to:

state of a relay - operated or released
relay make contacts - closed or open
relay breaker contacts - open or closed
state of relay winding - energized or de-energized

D. The use of feedback in a memory circuit. (Also the fact that it can lead to instabilities.)

E. The ability to store, address and retrieve binary digits by the use of memory circuits.

F. The ability to count, shift and sequence a number of events in a particular order.

III. Objectives

A. To demonstrate how circuits containing logic elements (such as contacts controlled by relays) can "remember" something which happened to them in the past.

B. To demonstrate that we can use a relay as a memory unit which controls itself (feedback).

C. To develop an understanding of how memory elements can be used in logic circuits.

D. To develop an understanding of the state (stable or unstable) of a circuit and the application of this idea to the above objectives.

E. To develop an understanding of an addressable memory, counting circuit, and shift register.

IV. Development

As mentioned in I, this chapter is highly lab oriented. It is suggested that the teacher explain and discuss each circuit on the board at the beginning of the period and then have the students build the circuits on the L.C.B. for the rest of the period. Be sure, therefore, to have outlets available for daily use of the L.C.B. in class.

By now, your students should be able to take a contact network circuit and wire it up on the L.C.B. without a formal running list, analyze the circuit and discuss its general function. Each circuit discussed in the chapter should be built by every student (or small group of students).

A good teaching technique is to have your students from time to time explain a new circuit to the class. They like this kind of involvement and it makes for an interesting teaching-learning situation.

Be sure to encourage experimentation with the L.C.B. and "original" circuit design by the students. In fact, a good idea is to keep a file of all circuits of this type for future use in the course.

V. Homework problems with answers

Relative difficulty of questions found in Chapter A-4:

EASY	MODERATE	DIFFICULT
*1 *10	* 3 7	5
2	* 8 9	14
4	*11 12	*15
6	13	

*Key Problem to be Attempted by All Students

4-1 In the two circuits below, discuss what happens when, starting with the condition that relay P is released, the switch A is operated. What happens when, starting with condition that P is operated, A is released?

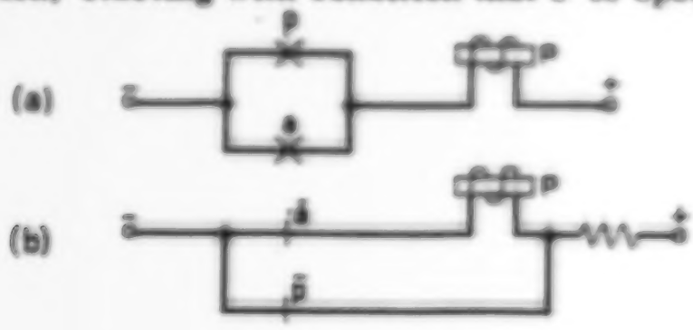

Ans.:

(a) When switch A is operated, contact a is made, relay coil receives current, magnetic field builds up, and armature is moved over so that the make-contact p is closed. This time delay, usually about 1 millisecond, is known as the relay travel-time. When a goes to the unoperated state, the p make-contact maintains a constant current through coil of relay P. This p-contact is known as a holding-contact.
(b) Relay is initially shorted by $\bar{p}$, and will remain unoperated, independent of operation of a.

4-2. Analyze the operation of the following two circuits; that is, describe step-by-step, starting with all switches and the relay unoperated, what happens when
(a) switch A is operated and then switch B is operated;
(b) switch B is operated and then switch A is operated.

(a)

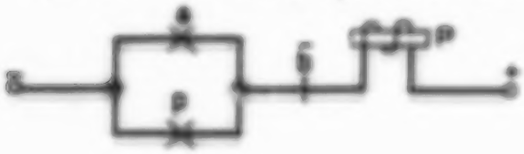

(b)

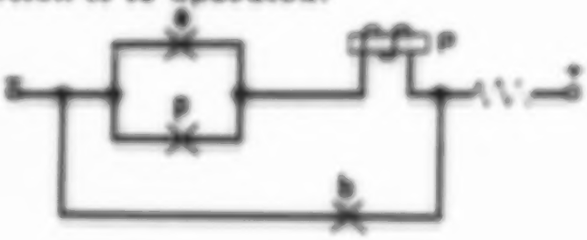

Ans.:

(a) When switch A is operated, relay P is energized since switch B is unoperated and contact $\bar{b}$ is closed; contact p is made and the relay remains energized through contact p independent of future states of switch A. If switch B is now operated, its break contact b is opened and the relay will go to the unoperated state.
(b) Circuit (b) is identical with (a) except that instead of opening the circuit to P by operating switch B, this time P is shorted by the operation of B.

4-3. In each of the three circuits below analyze what happens, starting with both switches and the relay unoperated, when
(a) switch A is operated and then released, then switch B is operated and then released;
(b) switch B is operated and then released, then switch A is operated and then released.

(a)

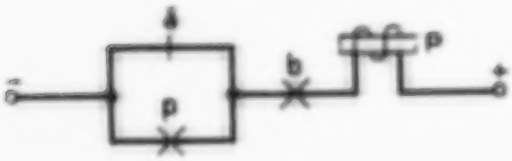

(b)

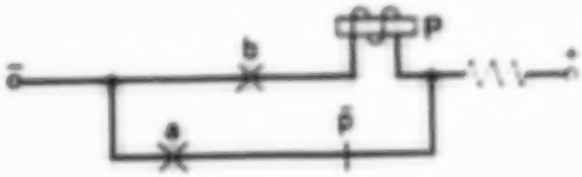

(c)

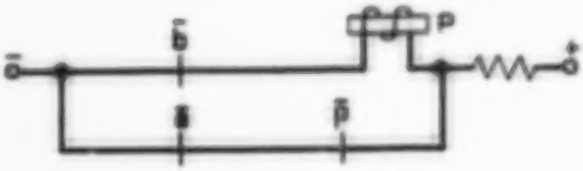

Ans. to part (a):

Circuit (a): Operate A and release it, nothing happens; operate B and P operates, closing p, but when B is released, P goes to the unoperated state.
Circuit (b): Relay P is dependent only on the state of switch B.
Circuit (c): Operate A, which opens the short-circuit, and P operates; release A, P remains unchanged; operate B, P releases; release B, original state is restored.

Ans. to part (b):

Circuit (a): Operate B, relay closes; open B, relay releases; if A is now operated and released, nothing happens.
Circuit (b): When B is operated and then released, P is operated and then released; when A is operated and then released, P is unoperated and remains so.
Circuit (c): Circuit is initially shorted, therefore operating B has no effect; but when A is operated and then released, relay P is operated and remains so, because the short is removed.

4-4 Explain the operation of the two circuits below.

(a)

(b)

Ans.:

(a) Unstable, relay chatters on and off (with a period less than twice the travel time of the armature.)
(b) Equivalent to (a) but period now equals twice the armature's travel time. These circuits illustrate feedback.

4-5 In the circuit below, switch A has been released for a long time, and then it is operated. What are the possible resulting states of operation of the relay P? Explain.

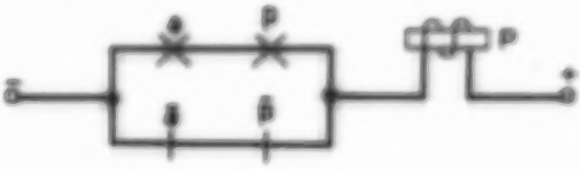

Ans.:

Initially unstable, relay is chattering. If when A is operated, the make contact p is closed, the relay remains operated; but if make contact p is open (and therefore $\overline{p}$ is closed), the relay remains unoperated.

4-6 A bimetallic strip controls a contact, t, so that when the temperature is high the contact is open and when the temperature is low the contact is closed. The contact is placed in series with a resistor, R, the heat from which can raise the temperature of the bimetallic strip. Explain what happens when the circuit is in operation over an extended period of time. Would you call this a stable or an unstable circuit? Why?

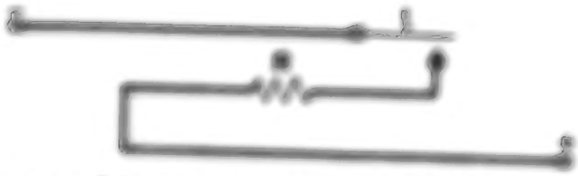

Ans.:

Stable as long as ambient temperature remains sufficiently high; but if temperature drops enough for contact to close, heater is activated, contact reopens in due course, and cycle repeats; circuit is unstable in this condition.

4-7 Two bimetallic strips control two contacts t_1 and t_2 (when the temperature at a strip is high the contact is open; when the temperature is low the contact is closed). The resistor R_1 is placed next to contact t_1 so that when current flows in R_1 the temperature at t_1 is raised. How would you expect the circuit to behave over an extended period of time? Would you call this circuit stable or unstable? Discuss.

Ans:

This circuit represents the thermostats and the heating elements of a double electric blanket with the wiring inadvertently switched so that the thermostat on His side controls the temperature on Her side and vice versa. Thus, if She is cold, She adjusts the thermostat on Her side which causes an increase in temperature on His side. He, in turn, becomes warmer and therefore turns down his temperature control which results in less heat on Her side and She in turn becomes colder.

This will yield a stable situation for the heater on one side will be on continuously while the other will remain off.

4-8 Discuss what conditions are necessary to turn the lamp L on and off in the following two circuits.

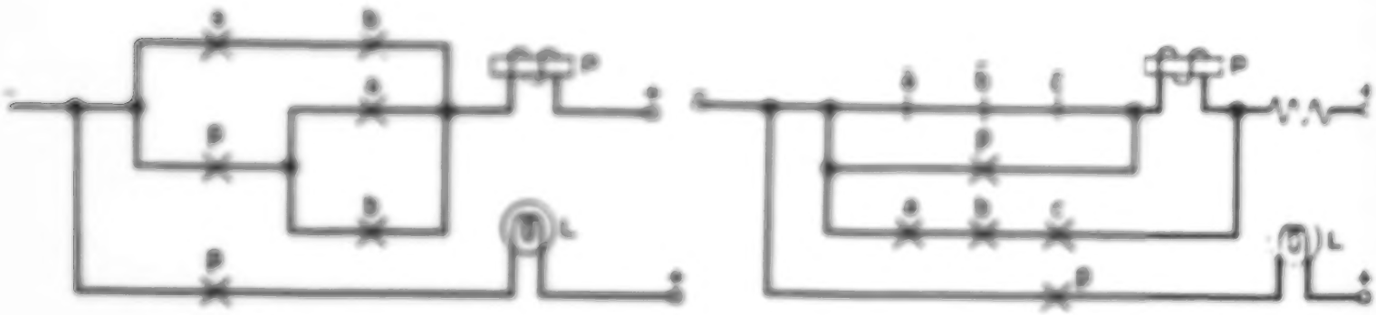

(a) (b)

Ans.:

(a) L goes on if A and B are operated; it remains on if either A or B but not both is now released. L goes off again when both A and B are released.

(b) L is initially on if A and B and C are initially unoperated; L will go off if and only if all three switches are operated.

4-9 The following circuit is used to determine which of two contestants in a T.V. quiz show operates his switch first. Discuss the operation of

this circuit assuming that switch C is released. What is the probable purpose of switch C?

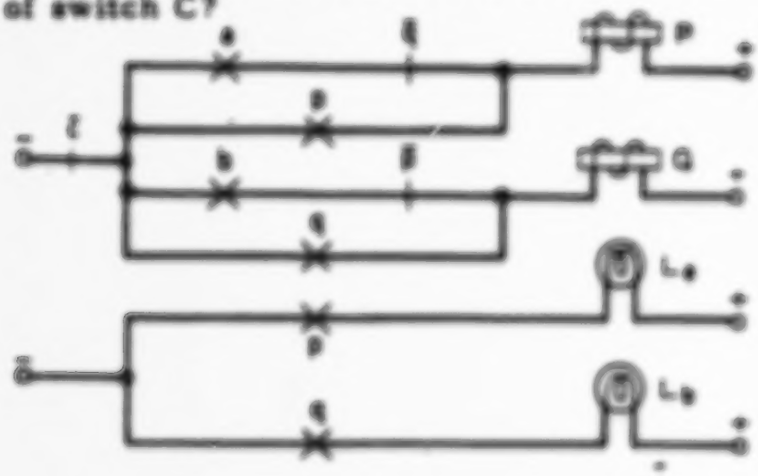

4-9 Ans.:

Lamp L_a goes on if and only if switch A is operated before switch B. In this case, lamp L_b cannot be lighted. Vice versa for switch B first. Switch C is to reset the circuit to its initial state.

4-10 Discuss how to operate the switches A and B to turn the lamp L on and off in the circuit below. If the relay and switches are initially unoperated what is the shortest sequence of operations which will turn the lamp on?

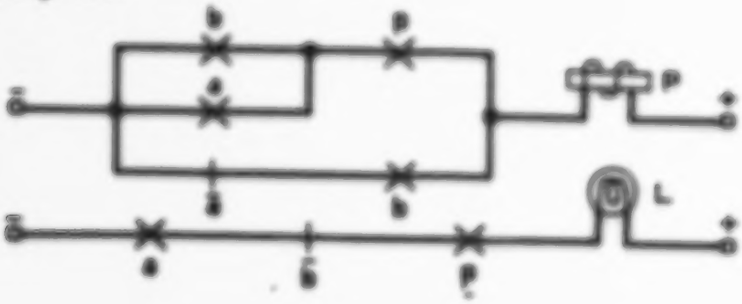

Ans.:

Operate B (P closes); operate A (P holds); release B (lamp on). To turn lamp off, release A or operate B.

4-11 (a) Describe the shortest sequence of operations of switch A which will cause the lamp L to be turned on. Assume that all switches and relays are initially unoperated.
(b) How can the lamp be turned off again?

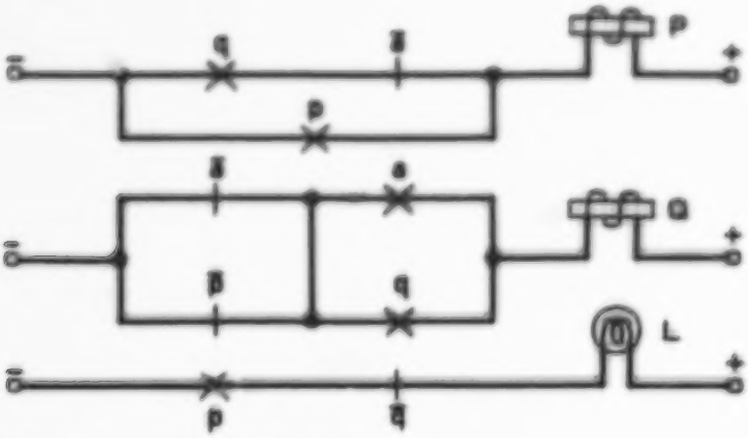

Ans.:

Operate A (Q closes); release A (Q holds, P closes and holds); operate A (Q releases), light goes on. Release A and light goes off.

4-12 Refer to Fig. 6(b) of the text. Recall that 0's and 1's can be stored by operating and releasing switches A and B, and that the states of operation of C and D determine the address at which data are stored or sensed. For all parts of this problem assume that all switches and relays are initially unoperated.

(a) What and where is information stored when the switches D and A are operated (in that order) and switch A is released?

(b) What and where is information stored when C is operated, A is operated and released, and B is operated and released (in that order)?

What sequence of operations is necessary to

(c) store a 1 in the relay S?

(d) store a 0 in the relay R?

Ans.:

(a) Q is in the state "1".

(b) R has gone to the state "1" and then to state "0", which is stored.

(c) Operate C and D and then operate and release A.

(d) Operate C, then operate and release B (this ensures that if B previously had stored a "1" it would now be erased).

4-13 Describe the sequence of operations that are necessary to turn on the light in the following circuit. Give the reason for each operation.

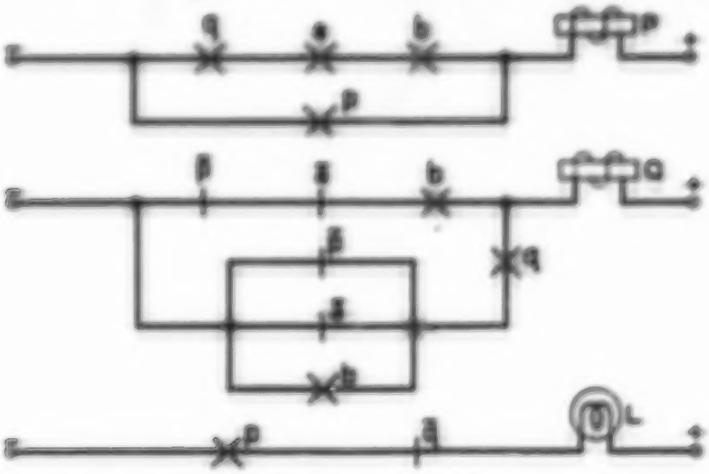

Ans.:

Operate B (Q closes and holds); operate A (P closes and holds); release B (Q releases and L goes on).

4-14 The switches in the following circuit are operated in the following sequence:

	1	2	3	4	5	6	7	· · · · ·	13	14
a:	0	0	1	1	0	0	1	· · · · ·	0	0
b:	0	1	1	0	0	1	1	· · · · ·	0	1

Describe how the relays P and Q operate and release, and how the number of times they operate relates to the number of operations of switches A and B.

4-14

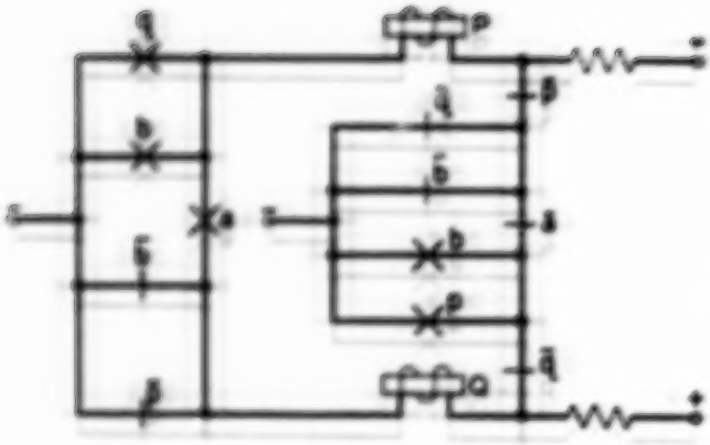

Ans.:

Step	1	2	3	4	5	6	7	8	9	10	11	12	13	14
a	0	0	1	1	0	0	1	1	0	0	1	1	0	0
b	0	1	1	0	0	1	1	0	0	1	1	0	0	1
P	0	0	0	0	0	0	1	1	1	1	1	1	0	0
Q	0	0	0	1	1	1	1	1	1	0	0	0	0	0

(Note: this is a difficult problem which is best suited for the eager and intelligent student. Use of the LCB to check the analysis would be a good idea).

4-15 Describe, step-by-step, what happens in the following circuit when switch A is alternately operated and released.

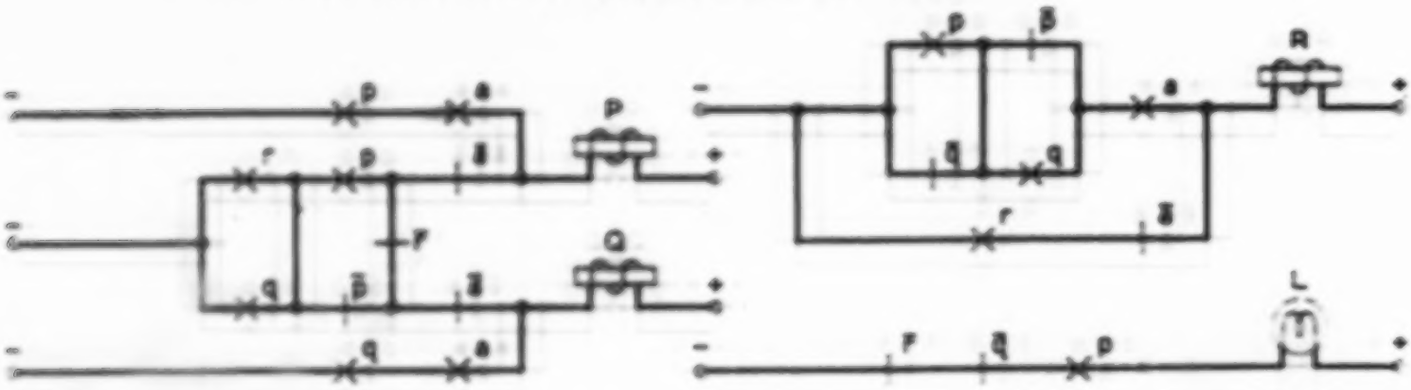

Ans.:

Step	0	1	2	3	4	5	6	7	8
a	0	1	0	1	0	1	0	1	0
P	0	0	0	0	1	1	1	1	0
Q	0	0	1	1	1	1	0	0	0
R	0	1	1	0	0	1	1	0	0

L goes on at step 7.

VI. Quiz and Test Questions with Answers

1. In the COUNTER CIRCUIT shown on the next page you find external inputs A, B, C, and J. There are three output lamps shown, L_1, L_2, and L_4. Let us assume that this circuit is just now "put on the line" and all the relays and switches are in their zero states.

   Ans.:

   (1) What is the main function of the c contact? (To clear to 0)

   (2) What is the state of relay R and S if we pulse A on-off five times? (A=0-1-0-1-0-1-0-1-0-1 we end with the fifth on state)

   R = 0 S = 0

   (3) What is the frequency of relay R's operation vs. the frequence of relay T's operation?

   $\frac{FreqR}{FreqT} = \frac{2}{1}$

   (4) If we define the first A = 0 state as the step number one, and when we operate A to A = 1 as the step number two, and again A = 0 as step #3, etc., what step number will FIRST light lamp L_2?

Step #	1	2	3	4	5	6	7	8	.....
A state	0	1	0	1	0	1	0	1	.....

   Step # 3

   What step number will FIRST light lamp L_4? Step # 5

   What step number will FIRST operate R? Step # 3

   (5) Describe the purpose of input switch B and contacts of relays labeled J.

   (To clear and reset to any desired count: set J switches properly, then operate B briefly.)

   (6) If we find that at a given time the state of the circuit is P = 1, Q = 1, R = 0, S = 1, T = 0, U = 0, V = 1, and W = 0, B = 0, and C = 0, what must be the state of A at this time?

   A = 0

   What are the lamp output states at this time? L_1 = 0. L_2 = 0, L_4 = 1.

   If we now change the state of A, what is the resulting output of lamps 1, 2, and 4? L_1 = 0, L_2 = 0, L_4 = 7,

   Switch C is now operated and then released. What happens to relays R and S? (They are now both at 0.)

2

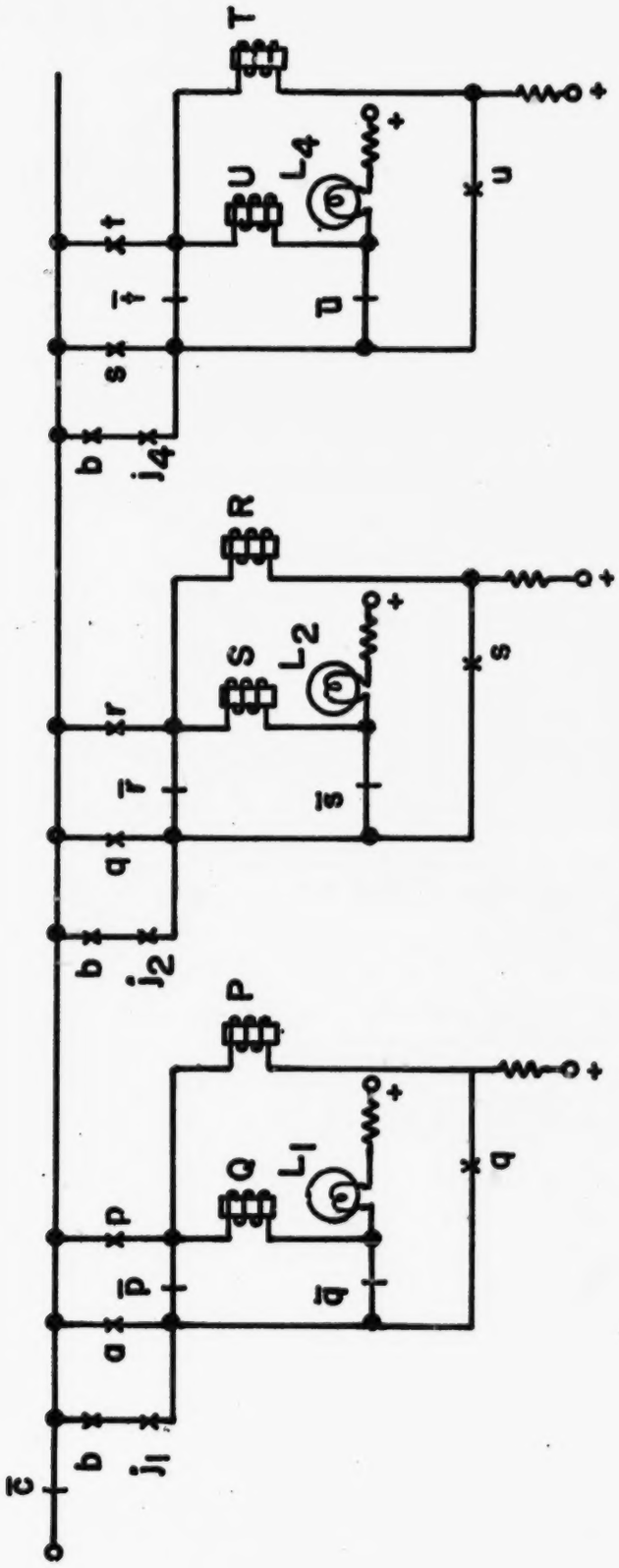
c
b
j_1
a
$\bar{p}$
p
Q
L_1
$\bar{q}$
P
q
+
b
j_2
q
$\bar{r}$
r
S
L_2
$\bar{s}$
R
s
+
b
j_4
s
$\bar{t}$
t
U
L_4
$\bar{u}$
T
u
+

2. If we wish to design a circuit which will count to 15, how many stages must there be?

Ans.: 4.

3. Which of the following constitutes a feedback circuit?

(a) 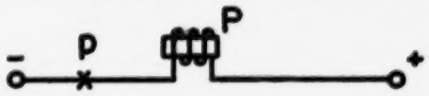

(b) 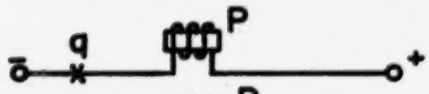

(c) 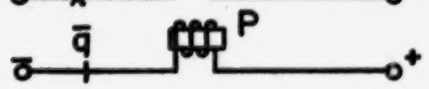

(d) 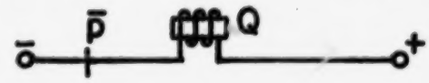

Ans.: Only (a).

4. In the single stage counter shown below, what are the states of relays P and Q after A has been turned on, off, and on again? (Assume all components were initially released.)

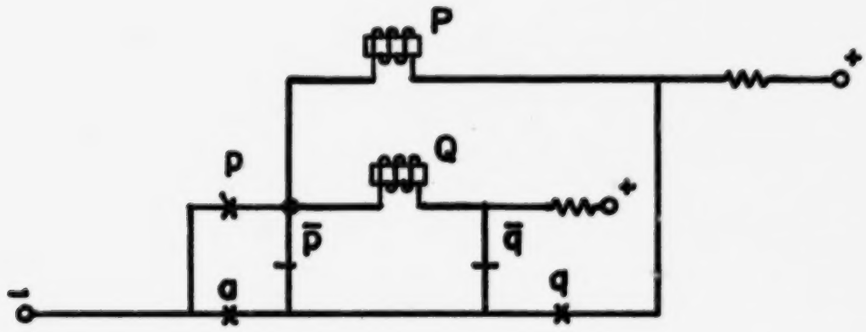

Ans.: P = 0
Q = 1

5. Using truth tables, prove that in Boolean algebra, $a + \bar{a} \cdot b = a + b$

Ans.:

a	b	$\bar{a}$	$\bar{a} \cdot b$	a+b	$a+\bar{a}b$
0	0	1	0	0	0
0	1	1	1	1	1
1	0	0	0	1	1
1	1	0	0	1	1

6. Draw a simple circuit to represent the statement, "P or Q or both."

Ans.: 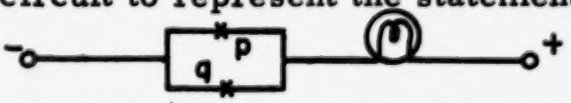

7. Draw a simple circuit to represent the statement, "P or Q but not both".

Ans.: 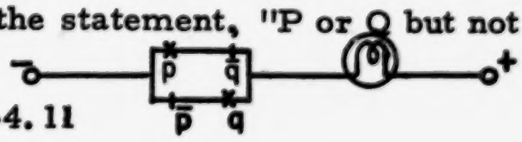

8. Shown below is a block diagram of a shift register. Switch A provides the pulses for the shifting action, and switch B determines what is "read in" to the register. Complete the chart below, assuming that B is set as indicated before each shifting pulse. Q, S, U, and W are the output relays of each stage.

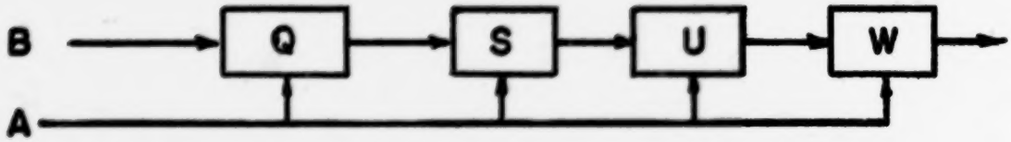

Ans.:

	B	Q	S	U	W
initial	0	1	0	1	1
1st shift	0	0	1	0	1
2nd shift	0	0	0	1	0
3rd shift	1	0	0	0	1
4th shift	1	1	0	0	0

9. Complete the chart below to indicate what happens in the following circuit when switch A is alternately operated and released. Assume that all contacts are of the "make-before-break" type.

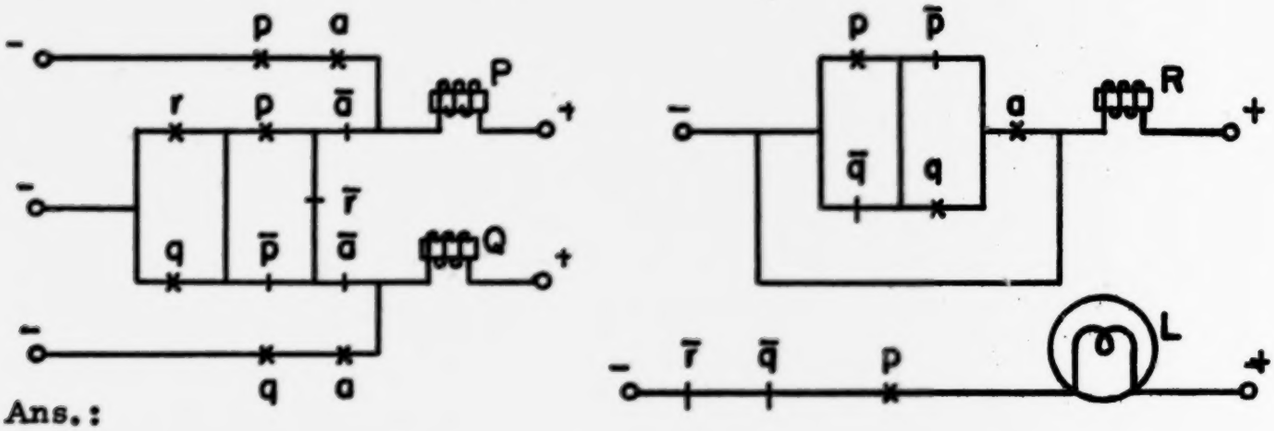

Ans.:

Step	0	1	2	3	4	5	6	7	8
A	0	1	0	1	0	1	0	1	0
P	0	0	0	0	1	1	1	1	0
Q	0	0	1	1	1	1	0	0	0
R	0	1	1	0	0	1	1	0	0
L	0	0	0	0	0	0	0	1	0

10. Is the following feedback logic circuit stable or unstable?

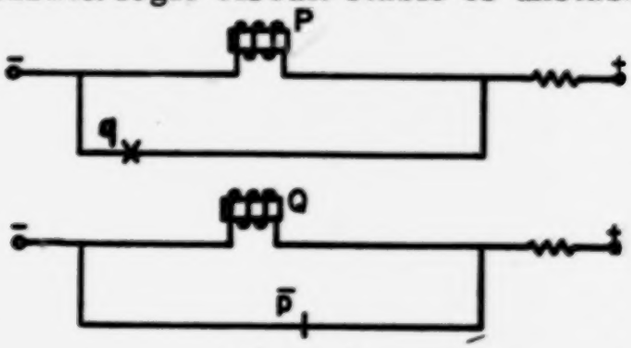

Ans.: Unstable.

11. What is the meaning of the term bit? Ans.: binary digit
In what sense can memory be stored in a computer?

Ans.: Relay unactivated = 0
Relay activated = 1

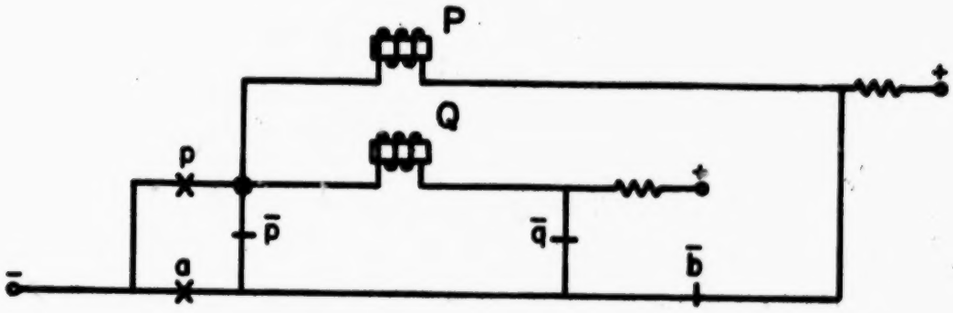

12. (a) Construct a truth table to find out what happens, in the circuit above, to relays "P" and "Q" each time switch "A" is operated and released after "B" has been operated once, but not released.
(b) Extend the truth table to find out what happens to these relays if "A" is now released, then "B" is released, and then "A" is first operated and then released.
(c) What type of circuit does this represent?

Ans.: (a)

A	B	P	Q
0	1	0	0
1	1	1	0
0	1	1	1
1	1	1	1

(b)

A	B	P	Q
1	1	1	1
0	1	1	1
0	0	1	1
1	0	0	1
0	0	0	0

(c) A shift-register circuit

13. (a) How many memory locations could you have with a 5-digit address?
(b) With a 7-digit address?

Ans.: (a) 32
(b) 128

14. (a) Explain how an elevator with memory differs from one with no memory circuit.
(b) What inconvenience does a waiting passenger encounter with the latter?
(c) What inconvenience does a riding passenger experience with the former?

Ans.: (a) A memory elevator will remember a call signal that is pushed after it has begun a trip and will stop enroute to its original destination at the call floor; whereas a non-memory elevator will go to 1st destination called for, then stop, necessitating a re-push of the 2nd call button.
(b) He must wait until the elevator has stopped before pushing the button.
(c) His elevator is no longer an express, but becomes local with possible stops at each floor.

Note: The decision to make the elevator with memory or without memory has several social and economic considerations. A further extension of this question might ask what these inputs to the decision are.

15. Multiply 29 x 22 in binary notation; check your answer against the decimal value.

Ans.:

```
      29 = 1 1 1 0 1
      22 = 1 0 1 1 0
      ---------------
        (1) 0 0 0 0 0
      (1) 1 1 1 0 1
    (1) 1 1 1 0 1
  (1) 0 0 0 0 0
    1 1 1 0 1
  -----------------
  1 0 0 1 1 1 1 1 1 0
```

(Carry digits in parenthesis)

```
512
 64
 32
 16
  8
  4
  2
---
638
```

Binary

```
 29
 22
---
 58
58
---
638
```

Decimal

16. There are only four external inputs for the FOUR ONE-BIT MEMORY CIRCUIT shown in the diagram on the next page. These inputs are A, B, C, and D. There is only one output for this circuit and that is lamp L_s.

Ans.:

(1) What is the function of contact a in the circuit? (To input 1)

(2) What is the function of contact b in the circuit? (To input 0)

(3) What are the states of the inputs (A, B, C, D) if we wish to make relay R go from the 0 state to the 1 state?

A = __1__; B = __0__; C = __1__; D = __0__.

(4) When P = 1, Q = 0, R = 0, and S = 1, and we next set the input switches A = 0, B = 0, C = 0, and D = 0, what is the state of L_s?

L_s = _____0_____.

All the above contacts and switch states remain the same except that we make one change, D = 1. What is the new state of L_s?

L_s = _____0_____.

Next set input switch B to the B = 1 state. Explain what happens. (At this time A = 0, B = 1, C = 0, D = 1). (0 stored in Q)

(5) What modification would you add to this circuit in order to clear the whole memory unit so that all the relay coils were reset to zero? (Break contact of fifth switch between power source and network.)

(6) What is the name and/or function of the pair of contacts c and d on the "branch of the tree" leading to relay S? (Address)

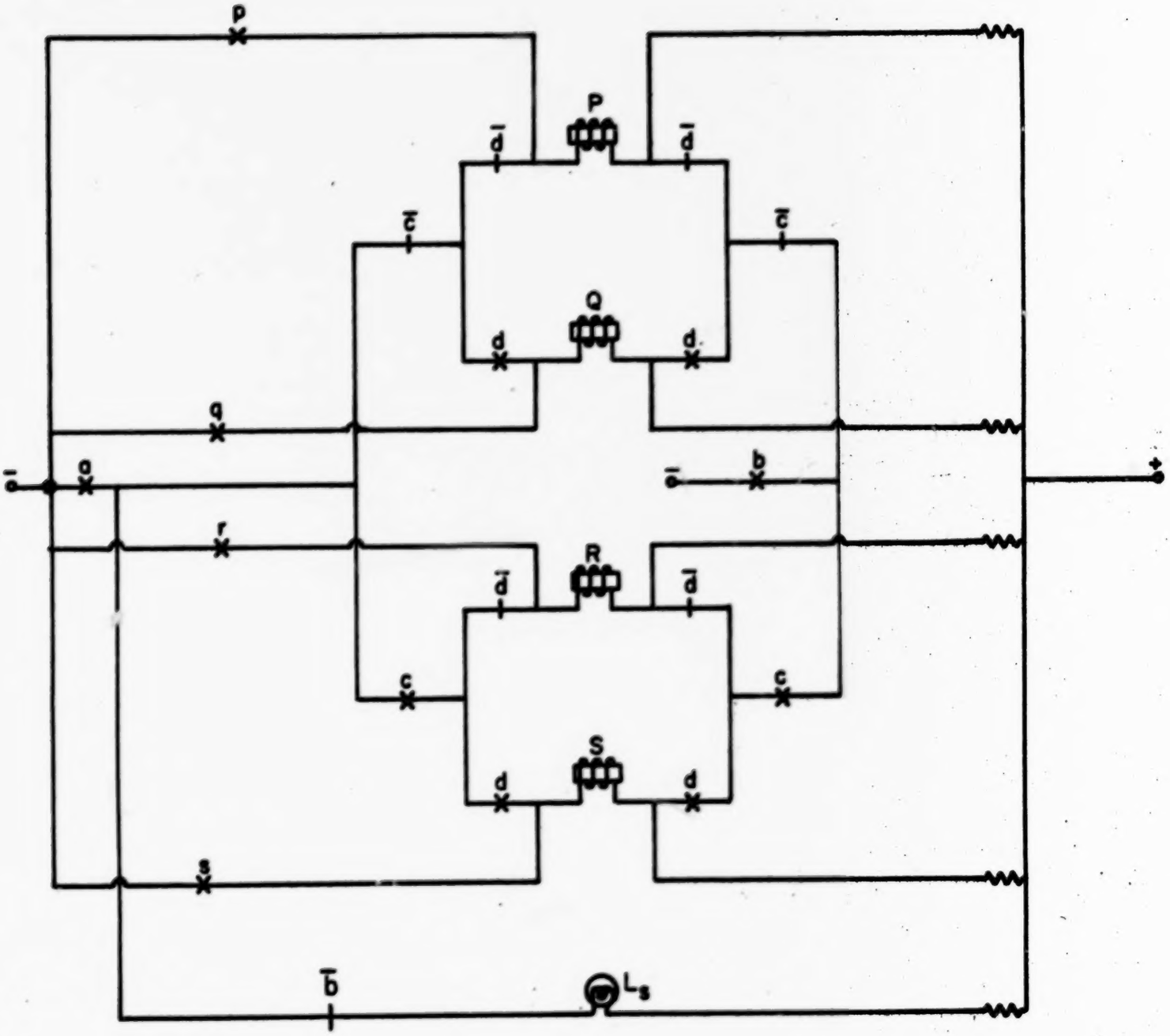

Four One-Bit Memory Circuit:

VII. Supplementary Materials

1. A technique for studying networks

When discussing in class such networks as that in Fig. 6, for example, the technique used in Section 7, Chapter 2, will be found very helpful. These networks are the kinds in which a sequence of states must be investigated. A sketch of the circuit is copied on the chalkboard with the contacts properly labeled (e.g., a or $\bar{a}$, etc.). Relays are conveniently designated by square boxes containing the proper letter. At each spot where contacts are open, the path is broken by a stroke of the eraser, while closed contacts are shown by a continuous chalk line. Changes in the states of the various contacts are swiftly made, and the existence or absence of paths is immediately visible. Of course, it is essential to go over the diagram again with some care every time the state of a switch or a relay is changed, to bring the situation up to date.

2. Additional circuits

Be sure to check the Teacher's Lab Manual (at the back of this manual) for four additional circuits for optional lab work as follows:

a. The Runway Circuit (Fig. 6, Exp. IV), is simple and dramatic. It illustrates feedback quite well.

b. The Combination Lock (Fig. 7, Exp. IV), is an interesting exercise and is included to drive home the concept of logic circuits with memory.

c. Simple Function Circuit (Fig. 9, Exp. III), is only moderately difficult. Use the truth table to derive a graph.

d. The circuit of Fig. 11, Exp. III leads to a considerably more difficult analysis (the equation is a cubic). It will challenge your best students.

VIII. Material for Depth

1. References:

a. Caldwell: Switching Circuits and Logical Design, Wiley, 1958.

b. Culbertson: Mathematics and Logic for Digital Devices, Van Nostrand, 1958.

c. Kemeney, Snell and Thompson: Introduction to Finite Mathematics, Prentice-Hall, 1966 (2nd edition).

Unfortunately, these books do not use identical notation. Caldwell is more comprehensive than you will need, but perhaps the clearest exposition.

2. Film:

Memory Devices, 28 min., color. Obtain through your local telephone company business office.

Chapter A-5

ORGANIZATIN OF A COMPUTER

I. Approach

This chapter represents the bridge between the hardware of chapters 2, 3, and 4 and the software of chapter 6. In fact, it shows both in general and in extreme detail how the logic circuits discussed in these previous chapters can be assembled to work together to become a general purpose computer.

BEWARE. To guide a current phrase: "The medium is the message". The teacher should be careful to emphasize how the various elements fit together in the overall picture of a computer in general but should not necessarily dwell on the extreme detail of this interaction. This means that the teacher must make a decision in terms of "sizing up his class" (which he has done by now, of course) to see how much detail they want, need or can handle.

It is suggested that the general structure of the computer in terms of its operating elements or components be emphasized along with perhaps a more detailed study of the instruction cycle and control unit. The details of the operations of the other elements by themselves have for the most part been discussed in previous chapters. However, explicit knowledge of the details of the interaction of these elements within the computer is not necessary and is not required for further success and appreciation of the course. For the student who desires this information, the text gives extreme detail and a thorough analysis of the interaction of the component parts of the computer.

II. Major Ideas

(Note especially those starred)

A. Definition-Information is any quantity which can be represented by a combination of binary elements.

Film: For 10 ("highly recommended")

B. Information can be transferred from component to component by signalizing the setting of corresponding relays (select-copy)

C. The elements or components of a general purpose computer perform the following functions:

1. Information input and output
2. Memory
3. Arithmetic and logical manipulations
4. Control

Transparency; A - 5.9a

* D. Combinations of simple logic circuits discussed in previous chapters are sufficient to perform all these functions.

E. In performing each step of a computation, the computer goes through a predetermined cycle of operations which is repeated over and over again until completion of the program.

Films: F - 12 ("good"), L - 2

Transparencies. A-5, 9 b, c, d, e

F. Instructions are indistinguishable from data in that both are stored as signed numbers in memory cells. Instructions are interpreted by the computer according to a built-in convention (due to the way it was wired) and cause a computer to proceed through a well-defined sequence of instruction cycles to complete the desired computation.

* G. Since data and instructions can both be stored in the same memory, this means that a program can modify itself. This is one of the most important though tricky ideas in Part A. (This will be explained in chapter 6.)

* H. The simple general purpose computer discussed in this chapter is totally and absolutely representative of a large scale digital computer. This also is one of the most important ideas in the course.

Film: F - 21. ("optional")

The relay circuits have their functional counterparts in today's multi-million dollar machines, and the overall block diagram (laid out by Babbage well over a hundred years ago) is still typical, as the analysis of Stead Fast's actions shows.

III. Objectives

1. To bridge the gap between the "hardware" of chapters 2, 3, 4 and the "software" of chapter 6.

2. To show that by means of such representation, symbolic information can be transferred from one physical form to another (i.e., from punched cards to the state of operation of relays).

3. To present the organization of a prototype computer which can process information in physical form.

4. To indicate that such a machine can be constructed by using the logic circuits studied in previous chapters.

5. To expect that the student will be able to appreciate the overview or general interaction of the elements of a computer rather than the fine details of such interaction.

IV. Development

In order to focus our attention on the overview or general plan of the interacting of the various elements of our computer, let us attempt to spell out this overview in rather direct fashion, eliminating the hardware details. In order to do this, think of the block diagram in Fig. 19 as being broken down into the five basic elements of the block diagram in Fig. 6.

In general, input and output can be handled by a wide variety of devices much more highly developed than punched cards, such as display scopes, magnetic tapes, paper tapes, analog / digital converters, and teletypewriters. No matter how complex such a device might be, however, it always transmits information into or out of a digital computer in binary patterns which could be punched on cards. Because of this and because of its simplicity, we do our input and output with punched cards.

Storing and retrieving patterns in memory certainly have little appeal unless you can also manipulate the patterns in some useful way, perhaps to do arithmetic calculations with data which are in the memory. The accumulator not only accepts numbers previously stored in memory but is capable of performing various algorithmic operations on these numbers (e.g., adding two numbers together), and returning them eventually to the memory all under direct and constant supervision by the control unit. Since it must be able to manipulate numbers as well as "hold" them, the accumulator consists of circuits which add (subtract) and shift.

If any part of the computer can be thought of as its "brain", it is the control unit. This unit coordinates all the parts of the computer so that events happen in logical sequence and at the right time. (see instruction cycle for details). To show all the pathways control signals take to the other parts of our basic diagram in Fig. 6, refer to Fig. 19 if interested in these details. The most critical part of the control unit is the instruction cycle with four steps: (1) Fetch next instruction, (2) increment instruction counter, (3) executive instruction and (4) test for completions. The control unit, itself, is the unit which "makes things happen".

This is neither as powerful nor as mysterious as it may sound, for the control unit only does exactly what you tell it to do. Numerically encoded instructions, which are stored in memory, are fetched by the control unit (and temporarily stored in the instruction register) and directed to carry out certain basic algorithmic steps. The instruction register and instruction counter are merely two special circuits inside the control unit which "store the current instruction". The control unit is designed to "decode" each number sent to it and to initiate a chain of events designated by that number. For example, the instruction code number 2 causes addition, 0 causes input, etc. When one chain of events has been completed, the control unit is ready to receive another number from the memory and to initate the chain of events designated by that number, etc.

Relatively few algorithms or instructions which the control unit can interpret are actually built into any computer, but they include ones which make it possible, when combined in the proper sequence, to synthesize any algorithm whatever that could have been built in. This remarkable circumstance gives a computer enormous versatility, even the simple basic computer being discussed in this course. We speak of this kind of computer, one that stores its own instructions and provides for the general synthesis of algorithms, as a general-purpose computer.

The set of instructions which the computer is directed to carry out in specified sequence is called a program. It is the program that states the procedure the computer is to follow in solving the problem at hand. The program is thus a large problem-solution algorithm composed of many simpler algorithms, namely the basic ones provided in the repertory of the computer. The task in using the computer to solve a given problem is primarily one of writing an effective program based ultimately on the simple operations the computer "knows" how to do.

In principle, then, the steps that must be taken to use the computer to solve a problem are the following:

(1) Program: The problem must be analyzed and an algorithm for its solution constructed in the form of a sequential set of instructions which are in the repertory of the computer.

(2) Input: These instructions must be encoded in numerical form and stored in the memory together with any data required by the program.

(3) Operation: The computer must be started at the first instruction; all the steps of the program are then automatically carried out, the computer "cycling through" its instruction cycle for each instruction.

(4) Output: The results must be retrieved from memory.

These four steps would be quite tedious, if they had to be carried out in detail. Fortunately, there are many simplifying variations of these four steps, designed to make the task easier. It is possible, for example, when using a more sophisticated computer than ours to express the problem not in machine language but rather in a more powerful language which is easier to use. This language is automatically translated into machine language by a device called a compiler with all of the proper encoding done as it is translated. For this course, however, programming is done in our basic machine language so that we have a better understanding of how the computer operates with regard to these machine instructions rather than being concerned with a compiler and languages which are more convenient for a human being to use.

As already mentioned in I, care must be taken not to beat the students to death with excessive hardware details. Be sure to emphasize the overall picture of the general interaction among the elements of the computer as mentioned above, as well as the specific details of the instruction cycle.

The analogy using S. Fast Plodder is excellent.

A sensible approach might be to do sections 1 - 4, thus getting (1) an introduction to the chapter, (2) the motivation provided by Steadfast, and (3) an idea about a punched card encoding information. (4) Memory could be covered by a simple back reference to this circuit in Chapter A-4 (without reviewing its action in detail). Similarly, (5) the accumulator could be covered by explaining the notion of A, B and S registers, and alluding to its actual workings by back-reference to the adder circuit in Chapter A-2 (accumulator = adder + timing contacts) to transfer information to and from memory. Thus a detailed discussion of the two trickiest circuits can be replaced by a simple discussion of their functions as implementations of Steadfast's tools. The notion of an instruction in section 7 is crucial, but the transition from binary to decimal cardiac in section 8 can be handwaved as a notational convenience for writing instructions. The remainder of the chapter can be covered by doing only the snapshots (of the control cycle) and their associated text, leaving the indented, "in detail" paragraphs completely optional. Here is the place for overlays, followed perhaps by the "computer play" discussed below.

It is here that perhaps attention should be spent on details. One technique that has proved to be quite successful is to have the students rehearse and "act out" the various roles played by the different elements of the computer. This can be done by putting the block diagram in Fig. 19 on the board and having a certain student designated for each element. Card tags can be used to identify elements (students). The student who is "control" is in absolute charge. There should be no extraneous talking whatsoever, and a "messenger" should be used to transfer all information which goes from one element (student) to another.

Control may give terse directions, such as "Memory Call Selector" now pointing at the proper student), "select location 14", ... The student called on may then point to the desired location on the blackboard map. Initially, the program and data should have been loaded in memory, the various registers cleared (0's in them, not blanks!) and the first instruction address in the IC.

One feature of using this technique is that it focuses attention at each step on the particular student (element) involved and he must know and be able to explain his correct function at that time. This creates tremendous interaction within the class and leads to an excellent teaching-learning situation.

It is also at the point that a film loop has been provided showing the instruction cycle and control unit. This can prove very beneficial and has the advantage of being available for almost constant use by individuals or groups of students.

In this chapter there are no labs, but at this time (the end of the chapter) it is suggested that the Cardiacs be used by the class to give a natural transition from the detailed organization of a computer for executing single instructions to executing many steps of a program without worrying about the hardware details of operation (i.e., without reference to the block diagram.)

V. Homework problems and answers

Relative difficulty of questions found in Chapter A-3:

EASY	MODERATE	DIFFICULT
* 5.1	*5.5	5.6
* 5.2	*5.7	5.9
5.3	5.8	
* 5.4	*5.11	
5.10		
* 5.12		

*Key Problems to be attempted by all students.

5-1 Write the decimal number 396 in binary-coded decimal form.

Ans.: 0011 1001 0110

5-2 Write the binary number 1011010 in a binary-coded decimal form.

Ans.: The binary reduces to 90, which, in binary-coded decimal form, is 1001 0000.

5-3 Decode the following message according to the correspondence of Table III:

100001 110100 100011 111000 000100 111011 000001 001001 000110 00110

Ans.: JULY 4, 1966

5-4 Which of the following coded symbols are in error according to the error detection scheme of Table IV?

(a)	0000001	wrong	(d)	1001100	wrong
(b)	1000100	right	(e)	11 11111	wrong
(c)	110110 0	right	(f)	0111111	right

5-5 Construct (draw) a logic circuit which when properly connected to a card reader of the kind shown in Fig. 7 will turn on a light when there is a parity error on the card being read by it. The card is punched with the code of Table IV.

Ans.: 7-variable odd-parity circuit:

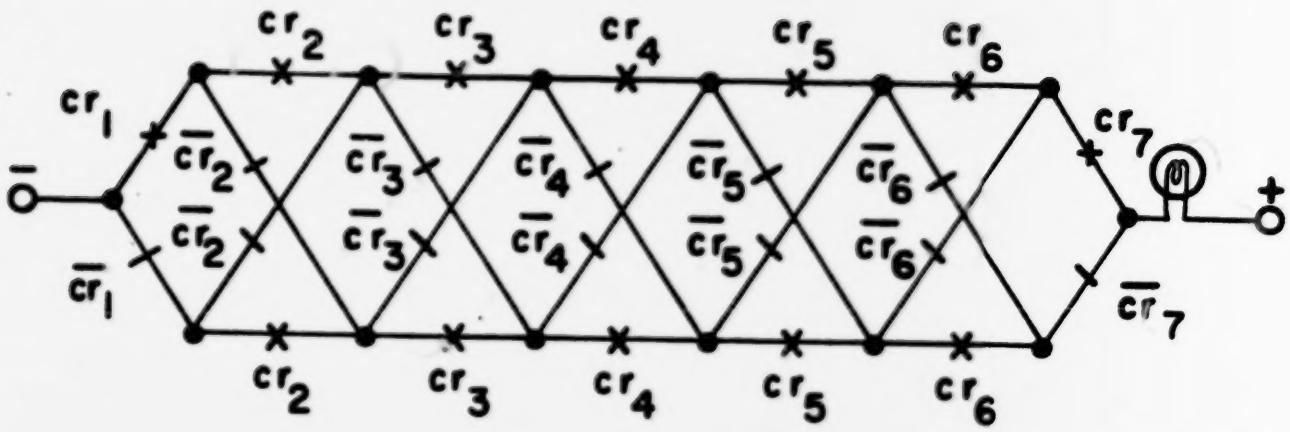

5-6 Construct (draw) a logic circuit which when properly connected to a card punch (Fig. 8) will punch the proper parity check bit onto each card as it is punched. The information on the card punch relays conforms to Table III.

Ans.: L - variable odd-parity circuit:

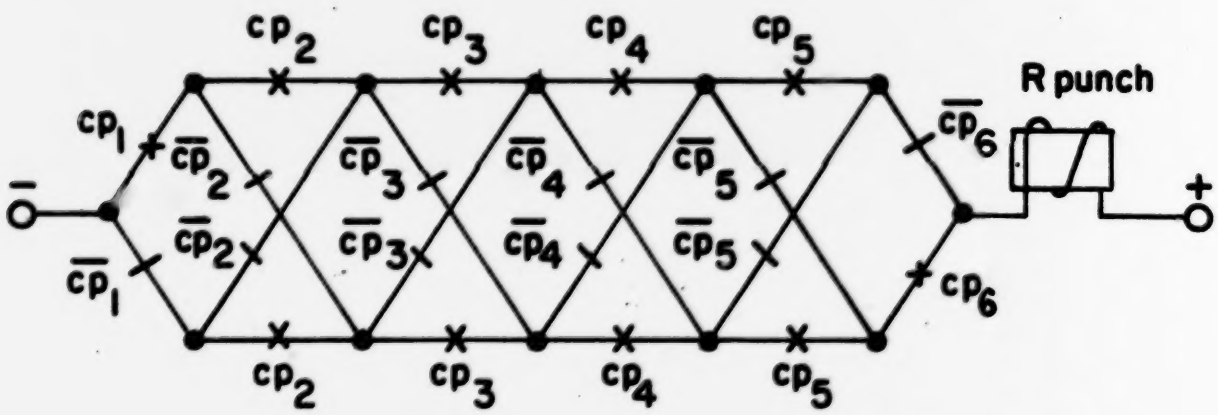

5-7 Write out a sequence of instructions for your assistant, Steadfast Plodder, to calculate the cost of a competitor's products (labor plus materials) from his price list, assuming that this markup is the same as yours. Make out an instruction sheet similar to Fig. 3.

Ans.: 1. Prepare a sheet with two columns. Label the first column "catalog number" and the second "cost".

2. Copy the first catalog number from the price list onto the sheet.

3. Clear your desk calculator and put the list price of this item into it.

4. Divide by 5.35.

5. Write the quotient on the sheet under "cost".

6. Copy the next catalog number onto the sheet.

7. Repeat, starting from step 3, as long as there are unused list prices. When you have finished etc.

5-8 Assume that you have a memory of 1024 cells storing 32 bits each. What is the total number of bits stored by such a memory? How many relays are required to access each cell independently? (Assume relays with any number of contacts are available.) How many bits are required in the address for each cell?

Ans.: (a) 2^{15} (or 32,768)

(b) 10 relays

(c) 10 bits

5-9 During each instruction cycle of a computer:

(a) how many times is the instruction counter incremented?
(b) how many times is the instruction register changed?

Ans.: (a) once

(b) once

VI. Quiz and test questions and answers

1. How is an item of information represented inside a computer?

Ans.: By the state of relay and switch contacts.

2. The text refers to two terms: data and information. What does each of these mean? Is there an important difference? If so, what is it? Are data and information encoded alike or differently?

Ans.: Information has a technical meaning in Information Theory, but in the present context the two words have the same implications, and are encoded alike.

3. Suppose you are constructing a small demonstration computer (say for a Science Fair project), and you are planning a memory to hold 64 items.

(a) How many layers will your access tree require?
(b) How many bits must be in each address?
(c) What modification, if any, must you make in the tree to handle
(i) 63 items?
(ii) 65 items?
(d) In the latter case, what is now the maximum number of items that can be handled, and how many bits are needed for each address?

Ans.: a) $64 = 2^6$; therefore 6 layers are needed.
b) 6 bits (extend Fig. 9).
c) (i) None.
(ii) One more layer must be added, and the tree can now handle
d) $2^7 = 128$ items, with 7 bits per address.

4. a) How many layers must there be in an access tree for a memory of 64 cells, each containing 1 bit? b) What kind of change must be made in the complete circuit in order that each cell may store 8 bits? c) What further changes must be made for a memory of 256 cells, each holding 16 bits?

Ans.: a) Same as 3 (a), of course. The state of the contacts of the final relay in each branch of the tree determines whether the bit stored is 0 or 1.
b) At each address we now need a total of 8 memory cells. Therefore we need 8 copies of the tree, wired in parallel, but with the initial a and b contacts replaced by i, $\overline{cr}$, and cr, contacts as in Fig. 12. Obviously, o contacts will also be needed if the computer is to have an output to a card punch or other read-out device (such as lamps).
c) $256 = 2^8$, so we must add two more layers to the tree; and there must be 16 replicas of the tree wired in parallel.

5. Explain in your own words how the control circuit and the clock pulses serve to make the computer execute its instructions in proper order.

Ans.: It is important to make clear that it normally takes 2 clock pulses to cause 1 complete step in the action of the computer: the first to the instruction register, the second to the register selector.

6. Consider the following block diagram of the hypothetical computer developed in this course

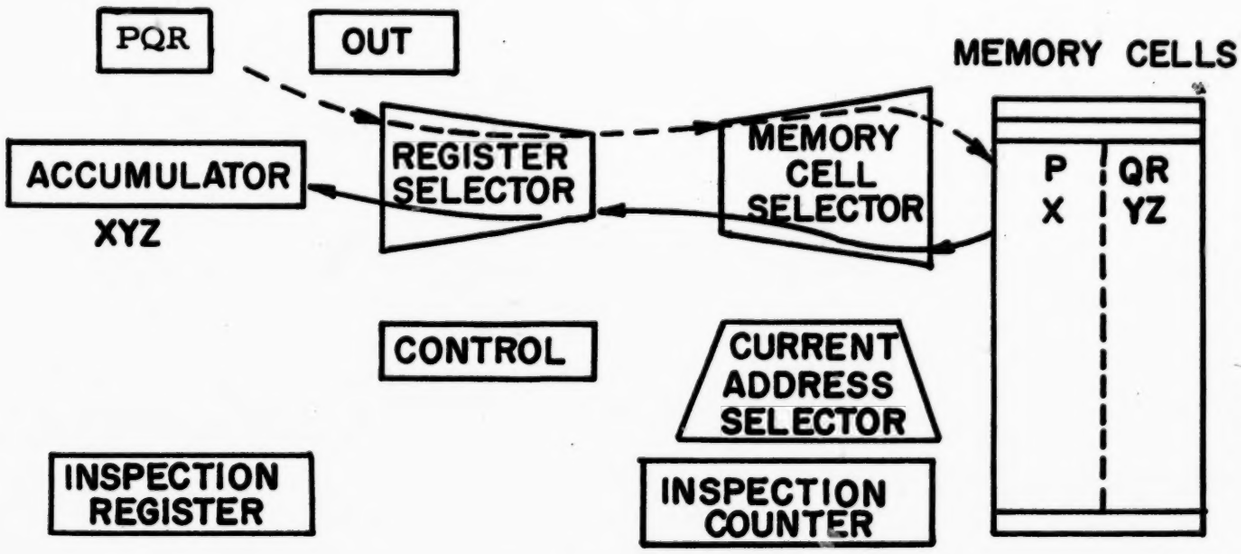

a) What is the function of each of the following components:

instruction register: This contains the operation code and address of the current instruction

instruction counter: This keeps track or count of the number of the present instruction

accumulator: This does the arithmetic. It, in effect, is the scratch pad.

current address selector: This is a set of relays whose contacts form the memory cell selector tree.

b) What type of circuit would you find in the memory cell selector?
Tree circuit

c) In the above diagram, draw a solid line with appropriate arrows to indicate the flow of information during the execution of an ADD instruction. Draw a dashed line with appropriate arrows to indicate the flow of information during the execution of an INPUT instruction.

d) There are four main steps in the instruction cycle of this computer. List them in order.

1. Fetch next instruction
2. Increment instruction counter
3. Execute instruction
4. Test for completion

7. The component of the computer which routes information from one section to another is the control unit. The section which "remembers" what instruction is next is the instruction counter. The section which stores each instruction during its execution is the instruction register. The section in which arithmetic operations are performed is the accumulator.

8. For the hypothetical computer which we have developed, indicate by appropriate numbers the order in which the following operations take place:

III decode and execute instruction

II add one to instruction counter

IV test for completion

I get next instruction

VII. Supplementary Materials

A. You and the Computer - General Electric Company, 1965. This booklet can be secured free of charge by writing to Educational Relations, General Electric Company, Schenectady, N. Y. 12305

B. An Introduction to IBM Punched Card Data Processing - Any IBM Branch Office

C. General Information Manual - Introduction to IBM Data Processing Systems, 1964 - Any IBM Branch Office

VIII. Material For Depth

As mentioned previously, the general organization of a computer should be emphasized, rather than specific hardware details. However, for the teacher or student who is interested in a more thorough and detailed approach, many parts of this chapter may be used for just this purpose. The above mentioned supplementary materials in VII should also serve as excellent material for study and background information.

Chapter 6
PROGRAMMING

I. Approach

This chapter deals with the "softwave" aspect of computer operations - that is, the programming of a computer. Care must be taken, however, to emphasize that in this course we are not primarily interest in turning out computer programmers but rather are concerned with explaining how a computer may be "told what to do" and with learning how to communicate with it in machine language.

It is important to note that perhaps the very last thing a typical industrial or commercial programmer learns, if indeed he ever uses it, is machine language programming. What usually happens is that he first learns a highly sophisticated language (as far as the computer is concerned) but a relatively simple language (as far as he is concerned). There are many of these languages such as Fortran, Basic, Algol, etc. When a programmer uses one of these languages which is similar to algebra, the computer has a device called a compiler which translates the language into a symbolic language first and then by use of an assembler into a machine language.

This machine language, then, is the direct means of communication with the computer. In other words, the final step of communication with the computer is done with machine language. As mentioned above, most programmers do not have to be concerned with using machine language and if they learn it at all, it is only after going through more sophisticated language first.

Since the basic purpose of Part A of this course is to understand how a computer is built and operates, we certainly want to see how it does this at the most basic level. This level of operation in terms of softwave is of course machine language programming. In other words, we have learned about logic and logic statements, binary arithmetic, relays and logic circuits and the design of a computer and now we are going to study how to take this package of hardware and communicate with it by means of our softwave, namely machine language programming.

One important point should be stressed throughout this chapter. Even though we have a very simple, elementary computer with a very limited set of instructions in its repetoire, we can do any mathematical problem that can be done on a large scale computer. (Keep in mind, of course, that we have a rather small memory, only 100 locations, and therefore the size of our program is very limited.) In other words, the important thing to emphasize is that our small computer is truly representative of a large general purpose, stored program computer.

II. Major Ideas

A. The principles of writing programs for a digital computer can be illustrated with the relatively simple computer described in this course.

B. A digital computer has the capacity of storing a program in its memory.

C. The fact that it is necessary to have precision of thought and execution in solving problems with the computer.

D. Real world quantities and relationships can be represented and manipulated with the computer acting as the vehicle or intermediary between thinking and accomplishment.

E. There are three major steps in solving a problem by a stored program computer; the program must be written, loaded, and executed.

III. Objectives

A. To demonstrate the use and application of a stored-program digital computer in solving real-world problems.

B. To develop an understanding of computer programming as it applied to the computer described in the course.

C. To develop an appreciation for the necessity of precision of thought and execution in solving problems.

D. To demonstrate the method and the advantage of writing a flow-chart for the solution of a problem before attempting the step-by-step machine language program.

IV. Development

At the beginning of this chapter there is a very brief introduction in Section 1 followed by an excellent review of Chapter 5 in Section 2. Do not dwell on this review. The purpose of this chapter is to teach machine language programming, not hardware. However, this review does serve the purpose of focusing our attention on the overall picture of computer operations.

In Section 3, the ten basic operations of our computer are discussed in detail. These, of course, should be explained very carefully and very clearly. Be sure not to rush through this. These ten operations must be understood by the students in terms of exactly what they do. (We are referring to the meaning of each operation, of course, not the application of these operations). After spending a sufficient time discussing and studying these operations, the student should be advised that facility in using them in terms of writing programs can best be accomplished by studying the programs written in the text throughout the chapter.

In explaining the first program, i.e. adding two numbers, the program should be put on the board and each step should be gone over in detail. Be sure that the students understand what is happening at memory locations 17, 18 and 19 as well as in the accumulator during each step in the program. After introducing the first program, the Cardiac could be used to have them get the feel of going through many (but not all) of the same steps as the computer. The Cardiac also helps to show contents in memory locations as well as the accumulator.

Essentially, then, what we have said above is that in introducing the chapter and explaining the ten operation codes and the first addition algorithm, the class should be exposed to the Cardiac in order to get at least some reasonable simulation of what is happening within the computer, the students will probably not use it very much, perhaps only two or three times, however, it does serve a very useful purpose.

In going through the remainder of the chapter, be sure to put the programs

on the board for better focusing of attention and class discussion and interaction. The writing of comments to the right of each step in a program can be very helpful. Perhaps this should be required, at least in the beginning.

From the very beginning, emphasis should be given to the flow-chart technique of writing programs. From the macro flowchart to the micro flowchart to the actual machine language program should be a natural transition. Be sure to require students to write a flow-chart first before writing the machine language program.

The programs in the text are rather well explained and in detail. Be sure to emphasize the conditional jump and looping, indexed loops, data processing by the use of shifting, and the loading of a program into memory. This material is covered in the first ten sections and is the basic material of the chapter. Students will probably find the last three sections rather difficult, that is, instruction modification, subroutine, and the billiard table simulation represent material that is quite a bit more sophisticated than the rest of the chapter. Therefore, care should be taken to allow for this.

In spite of the above mentioned difficulty, the teacher should try to get across the basic idea of both instruction modification and subroutining, the importance of the latter becomes rather obvious to the student. Such is not necessarily the case with the former. The student should be shown how the technique of instruction modification "enables the program to alter its instructions and stored data itself during execution" and how significant this is in terms of the flexibility of the computer. This has been described as one of the most powerful ideas in the last century.

Answers to problems, both within the chapter and at the end of the chapter can be found in Section V. Additional programs, as well as material on symbolic programming can be found in Section VIII.

V. Homework problems and answers

A. Problems from within the text

Question: (Page 11)

How would you generalize this program to punch out a list for an arbitrary year, instead of 050?

Answer:

Replace the contents of the address (where 050 was stored) by n (the variable) which is read into memory via an input card.

Problem: (Page 14)

Coding for the Morse Code recognizer program:

Answer:

Address	Instruction	Address	Instruction
20	045	36	746
21	145	37	343
22	746	38	749
23	343	39	341
24	749	40	843
25	327	41	550
26	843	42	820
27	045	43	548
28	145	44	820
29	747	45	n
30	343	46	+ 009 (s)
31	749	47	- 119 (o)
32	334	48	000 nn
33	843	49	001
34	045	50	999
35	145		

Question: (Page 19)

Coding for the largest of three numbers problem

Answer:

Address	Instruction	Address	Instruction
10	050	21	151
11	051	22	752
12	052	23	326
13	150	24	551
14	751	25	810
15	321	26	552
16	150	27	810
17	752	50	N_1
18	326	51	N_2
19	550	52	N_3
20	810		

Question: (Page 20)

Is it necessary to restrict the value of m to be no longer than 9?

Answer:

No. There is no restriction on the value of m. Since this merely determines the number of loops, it has no limit.

Question:

Is the order of the two input cards with the numbers n and m significant, or may the position of these two cards be interchanged?

Answer:

The order is not important. In one case, n, would have to be added to itself m-1 times. In the other, m would be added to itself n-1 times.

* Note: We are limited in the size of the product m x n. Since we have not talked about overflow, the product may not be more than 999.

Question: (Page 21)

Could we have interchanged the test and the addition of n?

Answer:

No, if we take the question literally. The index would never become negative and we would be caught in a loop. However, if the author meant "Could we add before we test, the answer is yes, if we change the program appropriately.

Question: (Page 18)

Coding for the Dealer program

Answer:

Address	Instruction	Address	Instruction	Address	Instruction
10	430	18	051	26	810
11	650	19	154	27	555
12	051	20	750	28	810
13	150	21	327	50	T (Dealer's total)
14	251	22	150	51	n (input card)
15	650	23	751	52	17
16	752	24	327	53	21
17	310	25	554	54	000
				55	999

Question: (Page 21)

As an exercise, write a micro flowchart and code for finding the sum of the first n positive integers (s = n + (n-1) + (n-2) + (n-3) + . . . + 1). Read n from a card and use an indexed loop in which the index is added to the partial sum.

Answer:

Refer to pages 6 and 7 of part B of Section VIII of the teachers manual. This problem is completely worked out in detail with full explanation.

Question: (Page 2)

Show how you would introduce a test for this last card in the read loop, so that you could then jump to 55 without an intermediate halt.

Answer:

```
        37  403
        38  658
        39  057
        40  157
testing    {700
+ 000      {355
        41  420
        42  260
```

Question: (Page 43)

Can you think of other applications in which real time computation would be vital?

Answer:

Computerized industrial operations or processes where information is taken continuously during the process and used later on in the same process. (Such as in a steel mill, chemical plant, electronics manufacturing, etc.)

B. Problems at end of chapter.

Relative difficulty of questions found in Chapter A-4:

EASY	MODERATE	DIFFICULT
* 1	* 4 11, 12	* 8
* 2	5 14, 15	10
* 3	7	13
6	9	

*Key Problems to be completed by all students.

1. What single machine code instruction would you write in order to have the computer do each of the following?

(a) Read the top input card and put its contents into address (memory location) 34.	034
(b) Add to the accumulator a copy of the contents in address 52.	252
(c) Clear the accumulator and bring to the accumulator a copy of the contents in address 95.	195
(d) Jump to the instruction given at address 24.	824
(e) Copy the contents of the accumulator into address 42.	642
(f) Substract from the contents of the accumulator a copy of the contents in address 33.	733
(g) Shift the contents of the accumulator first one place to the left and then two places to the right.	412
(h) Halt and reset the instruction counter to instruction at address 00.	900
(i) Test the contents of the accumulator. If the contents are negative go to the instruction at address 13.	313
(j) Print onto an output card the contents at address 19.	519

2. What is the meaning of each of the following instructions written in machine code? Write out the meaning of each in a complete English sentence?

(a) 042 - Read the top input card and copy contents in address 42, and advance top input card.
(b) 403 - Shift contents of accumulator 0 places to left and 3 places to right (the result is 000).
(c) 171 - Clear the accumulator and bring to it a copy of the word found at address 71.
(d) 410 - Shift contents of accumulator 1 place to left and 0 to right.
(e) 672 - Store contents of accumulator at address 72.
(f) 819 - Jump to instruction found at address 19; in effect this operation resets instruction counter to 19.
(g) 713 - Subtract the contents found at address 13 from the contents found in the accumulator at this time.
(h) 215 - Add to the contents of the accumulator the word found at address 15.
(i) 341 - Test the contents of the accumulator. If 0 or positive, go to the next instruction; if negative, go to instruction found at address 41.
(j) 516 - Print on an output card the contents at address 16.
(k) 900 - Halt calculation and reset instruction counter to 000.
(l) 309 - Test contents of accumulator. If 0 or positive go to next instruction; if negative go to instruction found at address 09.

3. If the top input card has the number 473 printed on it, and the second card has the number 052, what will each of the following programs do with these two numbers? (Assume that the top instruction is executed first.)

Memory Address	Word Stored
56	063
57	064
58	163
59	264
60	664
61	564
62	900
63	—
64	—

(a)

Memory Address	Word Stored
28	036
29	136
30	036
31	736
32	736
33	636
34	536
35	900
36	—

(b)

(a) This program will add 473 to 052 and print out the sum.
(b) This program will subtract 052 twice from 473 and print out the final difference.

4. The following program is one that might be used to find out if a number A is larger than another B or not. The top input card contains A, the second input card contains B. The answer "yes" is printed out as 001, the answer "no" is printed out as 000.

(a) How many tests are required to determine if A > B or not? Why?

(b) If the question was "is A $\geq$ B or not", how could this program be made shorter?
(c) If the result of the test at instruction 22 is positive what is the next instruction?
(d) What does this program do if the number A is a negative number?

Answers:

(a) Two. Because A may be equal to B.
(b) Steps given by instructions at addresses 23, 24, and 25.
(c) Instruction at 23.
(d) The top output card will read 000 (meaning no).

A program for determining whether or not A > B

Memory Address	Word Stored
16	030
17	031
18	403
19	632
20	130
21	731
22	326
23	131
24	730
25	328
26	532
27	900
28	500
29	900
30	—
31	—
32	—

5. The contents of the accumulator are changing most of the time during any calculation. These changes in the accumulator are important. In each of the short programs below tell what is in the accumulator after the execution of each instruction.

Memory Address	Word Stored	Contents of Accumulator
55	162	008
56	263	011
57	324	011
58	430	000
59	664	000
60	564	000
61	900	000
62	008	000
63	003	000
64	—	—

(a)

Memory Address	Word Stored	Contents of Accumulator
27	134	329
28	735	202
29	735	075
30	326	075
31	636	075
32	536	075
33	900	—
34	329	—
35	127	—
36	—	—

(b)

6. Write as brief a program as you can (in machine code, starting at address 53) which will find and print out the value of M-N where M> N and M is positive.

53	060	53	060
54	061	54	160
55	160	55	060
56	761	56	760
57	662	57	660
58	562	58	560
59	900	59	900
60	—	60	—
61	—		
62	—		

Note: these are equivalent programs. The second is given to show how a single memory cell can be used in sequence for different purposes.

7. Write a machine code program for finding the value of (M-5N). Start your program with a flow chart.

Flow chart:
- Get N
- Generate 5N
- Store (5N)
- Get M
- Generate M - 5N
- Store (M - 5N)
- Out and stop.

Program:

23	036
24	037
25	037
26	237
27	237
28	237
29	237
30	638
31	136
32	738
33	639
34	539
35	900
36	---
37	---
38	---
39	---

8. Write a machine code program that will put any three numbers, A, B, and C, copied from input cards in descending order.

Address	Word	Address	Word
19	053	38	156
20	054	39	655
21	055	40	154
22	154	41	753
23	753	42	349
24	331	43	153
25	153	44	656
26	656	45	154
27	154	46	653
28	653	47	156
29	156	48	654
30	654	49	553
31	155	50	554
32	754	51	555
33	340	52	900
34	154	53	—
35	656	54	—
36	155	55	—
37	654	56	—

A - 1 at address 30; A - 1 in accumulator.

9. Below you will find some parts of real program. An arrow indicated the instruction that is presently being executed. There are some memory locations that are left blank; determine what should go into each blank memory location and write what would be in the accumulator. The arrow shows the initial instruction in each case.

Memory Location	Word Stored
25	154
26	755
→ 27	656
.	.
.	.
.	.
54	329
55	312
56	017

Accumulator Contents = 017 (a)

Memory Location	Word Stored
19	430
20	642
→21	141
.	
.	
.	
41	937
42	—

Accumulated Contents = 937 (b)

Memory Location	Word Stored
10	029
11	129
12	728
→13	630
.	
.	
28	001
29	289
30	577

Accumulator Contents = 577 (c)

10. **What does the following program do?**

Memory Address	Stored Word
21	0 36
22	1 36
23	4 20
24	6 38
25	1 36
26	4 12
27	4 10
28	6 37
29	1 36
30	4 02
31	2 37
32	2 38
33	6 36
34	5 36
35	8 21
36	---
37	---
38	---

This program reads the top input card and prints on the first output card the same number with digits reversed. This process will continue as long as there is an input card without the number 000 on it.

11. Write a flow chart and corresponding machine program which will examine an arbitrarily large set of numbers on input cards (a blank card marks the end of the set) and which will print out only those cards which have on them non-zero integers.

Ans. Flow Chart:

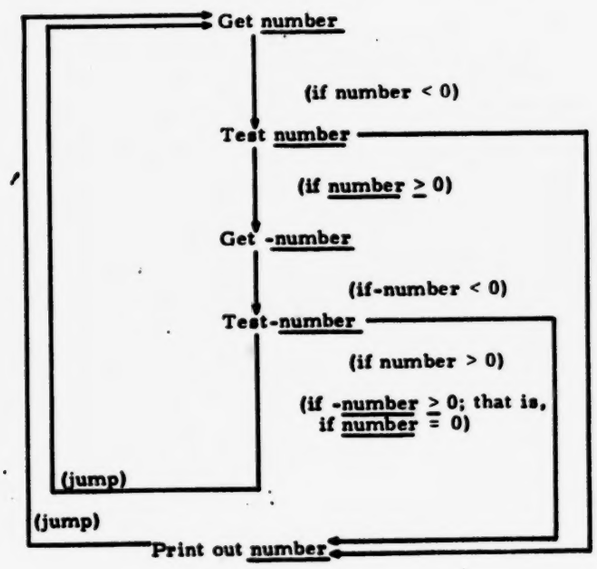

Machine Program:

```
20  029
21  129
22  327
23  403
24  729
25  327
26  820
27  529
28  820
29
```

12. Write a flow chart and machine program which will print out only those input cards which have on them odd (and positive) integers. (Suggestion: By a "422" instruction delete all but the right-most digits of the numbers.) A blank card makes the end of the set of input integers.

Ans.: Flow Chart:

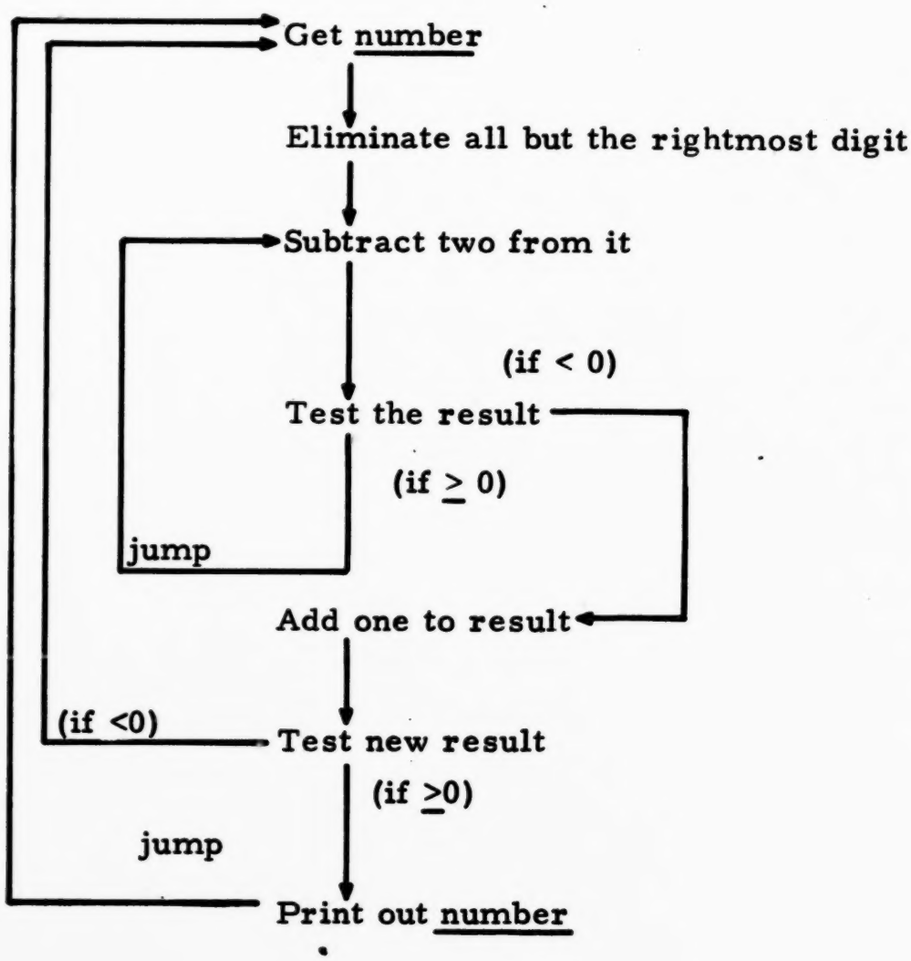

Machine Program:

20	033
21	032
22	132
23	321
24	422
25	733
26	328
27	825
28	200
29	331
30	532
31	821
32	000
33	002

Top card is 002, Cards 2, 3, 4, etc. comprise the list of numbers. The last card is blank.

13. A set of input cards (terminated by a blank card) contains numbers in which the right-most two digits specify an address, YZ. The left-most digit (X) is to be ignored in this problem. Write a machine program which will print out the contents at these addresses in memory. (For instance, if the input card reads 056, 156, 256, ..., 856 or 956 the corresponding output card should print out the contents at address 56.) This problem is most easily done by generating an instruction equivalent to "5YZ" which is executed later in the program.

Ans.

20	027	Copy in number
21	127	Bring it to the accumulator
22	411	Make the left-most digit zero
23	228	Add 500 to the result
24	525	Store the result as an instruction
25	000	Execute that (output) instruction
26	820	Return to get another number
27	000	
28	500	

14. Analyze what the program given below does.

20	403
21	628
22	028
23	129
24	228
25	628
26	528
27	822
28	000
29	000

Ans. The program prints out, at each pass through the program loop, the accumulated partial sum of the numbers on the set of input cards.

15. Analyze what the program given below does.

```
20  029
21  030
22  130
23  729
24  631
25  531
26  130
27  629
28  821
29  000
30  000
31  000
```

Ans. The program prints out, at each pass through the program loop, the difference between the number on the most recently examined input card and the number on the card immediately preceding it.

VI. Quiz and test questions and answers for Ch. A-6

1. What is the meaning of each of the following instructions written in machine code?

(a) 900	(d) 345	(g) 120
(b) 403	(e) 518	(h) 819
(c) 713	(f) 642	

Answers:

(a) Halt the calculation and reset the instruction counter to 00 and stop.
(b) Shift the contents found in the accumulator first zero places to the left, then 3 places to the right - result is 000 in the accumulator.
(c) Subtract from the contents of the accumulator the contents found in address 13.
(d) Test the contents of the accumulator. If it is zero or positive go to the next instructions. If it is negative go to instructions found at address 45.
(e) Print onto an output card the "word" found at address 18.
(f) Store the contents found in the accumulator into memory location A address 42.
(g) Clear the accumulator and bring a "carbon copy" of the "word" found at address 20.
(h) Place the count shown on the instruction counter in cell #99, and reset the instruction counter to 19. (Symbolic-jump to the instruction given at address 19.)

2. What single machine code instruction would write in order to have the computer do each of the following?
(a) Read the top input card and put its contents into address 45.
(b) Add to the accumulator the contents of address 25.
(c) Clear the accumulator and bring to the accumulator the contents of address 36.
(d) Jump to the instruction given at address 51.
(e) Store the contents of the accumulator into address 33.

Answer:

(a) 045	(d) 851
(b) 225	(e) 633
(c) 136	

3. Analyze the program. At the right of each instruction briefly write what that instruction does. Finally, describe briefly what the program does. (The top card has A printed on it, the second card has a B on it.)

Memory Address	Stored Word	Instruction
10	028	Get A + B into computer memory.
11	026	
12	403	Set address count to 00
13	627	
14	128	Subtract B from A
15	726	
16	322	Test - of neg go to address 22
17	628	Store A-B at 28
18	127	Add 001 to count
19	225	
20	627	Store back into count
21	814	Jump back-loop-to 14
22	527	Output for count
23	528	Output for (A-KB)
24	900	Finished and stop
25	001	Location for 001
26	---	DATA
27	---	DATA
28	---	DATA

Ans.:

The program will divide B into A and print out quotient and the remainder.

4. Write a program to read the first two input cards with A and B respectively printed on them. Have this program determine 2A-3B (absolute value) and print out the result. Arrange the program so that it returns and reads the next pair of cards, and the next pair and the next pair, etc., until it reads a blank card ending program. Start with address 10.

Ans.:

10	020
11	021
12	120
13	220
14	721
15	721
16	721
17	620
18	520
19	810
20	---
21	---

5. Fill in all blanks in the machine code program below. Include in Column C the contents found in the accumulator after the execution of each instruction. Also show the final contents in locations 22 and 23 after the total program has been executed.

A Memory Location	B Word Stored	ANS.	C Accumulator Contents	ANS.
13	120		—	012
14	721		—	003
15	221		—	012
16	622		—	012
17	412		—	001
18	623		—	001
19	522		—	001
20	—	012	—	000
21	—	009	—	000
22	—	012	—	000
23	—	001	—	000

6. Analyze the machine code program below. The top input cards are 003, and 002:
(a) What proper title could we assign to this program?
(b) At what instruction do you find the start of a loop?
(c) At the completion of this program what contacts would you find at address 21___; 22___; 23___; in the accumulator___.
(d) At what instruction do we find an exit?

Address Memory	Stored Word
07	403
08	621
09	022
10	023
11	123
12	724
13	623
14	319
15	121
16	222
17	621
18	811
19	521
20	900
21	
22	
23	
24	001

Answers

(a) Program that will multiply A x B.
(b) Loop is started at memory location 18. The loop consists of all instructions between 11 and 18.
(c) At 21: 006; at 24: 001; at 23: -001; in accumulator: -001.
(d) Exit is found at instruction 14.

7. What is the purpose of the "loading program"?

The purpose of the loading program is to place the program that is to be executed, into the memory of the computer.

8. Write a program in machine code that starts at address 42 and that when executed will find the value of 2A-B as long as B < 2A and A < 500.

42	050
43	051
44	150
45	250
46	751
47	652
48	552
49	900
50	---
51	---
52	---

9. Define in words the meaning of each:
(a) Algorithm - An Algorithm is a series of steps, or rules that when followed and executed will produce the desired output. (calculations)
(b) Address - An address is the NAME given to a single memory location in the computer.
(c) Register - A register is any location where a "word" is displayed - data on instructions.
(d) Program - A program is a series of instructions that is written in order to solve a particular problem.
(e) Execute - The term execute refers to the doing or completing of the specific instructions given in the program.
(f) Operation Code - Each specific machine operation is given an objective code. The computer is instructed to ADD two numbers, as an example, through the operation code ADD or 2 in the x location of the instruction.

10. Analyze the following program. At the right of each instruction, write briefly what the instruction does. Assume that the top card has the number "A" on it, and the second card has the number "B" on it.

Memory Address	Stored Word	
10	028	A.) Puts A into Cell 28
11	026	Puts B into Cell 26
12	404	Clears the accumulator
13	627	Stores 000 in Cell 27
14	128	Clears the accumulator & then adds A
15	726	Subtract B from A

Memory Address	Stored Word		
16	322		If A -B is negative go to 22
17	628		If A-B is positive store in 28
18	127		Puts 000 into the accumulator
19	225		Adds 1 to accumulator
20	627		Stores sum in cell 27
21	814		Jump back to 14
22	527		Print out contents at cell 27
23	528		Print out A
24	900		Holt, reset instruction counter to 00
25	001		
26	---	B	
27	---	000, 1, 2---	
28	---	A	

(b) Divides A by B

b. Describe briefly what mathematical operation this program performs.
c. What group of instructions constitutes a loop? 14 through 21
d. What instruction is the exit from the loop? 16

11. At the right of each instruction in the following program, indicate the contents of the accumulator (S register) after the instruction has been executed.

Memory Address	Stored Word		Accumulator
10	119		019
11	219		038
12	720		026
13	621		026
14	412		002
15	221		028
16	621		028
17	521		028
18	900		028
19	017		
20	012		
21	---	026, 028	

12. Describe what the problem does. The content of the top card is N.

25	403	
26	638	
27	039	
28	139	
29	336	
30	238	
31	638	
32	139	
33	740	
34	639	
35	829	
36	538	
37	900	
38	—	000,
39	—	N
40	001	

Ans.: This program evaluates the expression

$$\frac{N^2 + N}{2}$$ for positive values of N.

13. If a main program call subroutine MUG and subroutine MUG calls subroutine WUMP, how does the computer know to get back to the main program from subroutine WUMP? Do not write a program but simply explain what must be done by a programmer to provide for this.

Ans.: Since the answer produced by the second sub-routine WUMP is needed to produce the answer in the first sub-routine, MUG, the way to get back to the main program from WUMP is through MUG. SO. from MAIN TO MUG TO WUMP BACK TO MUG TO MAIN.

VII. Supplementary Materials

A. Darnowski, A Teacher's Guide to Computers - Theory and Uses, National Science Teachers Association, 1201 Sixteenth St., N.W., Wahsington, D.C.

B. Galler, Language of Computers, McGraw-Hill Book Co., New York, N.Y., 1962. (excellent for programming concepts - emphasis on softwave)

C. N.C.T.M. Computer Oriented Mathematics. - An Introduction for Teachers, National Council of Teachers of Mathematics, Washington, D.C.

D. Leeds and Wemberg, Computer Programming Fundamentals, McGraw-Hill Book Co., New York, N.Y., 1961.

VIII. Material for Depth

A-Additional Programs

1. Program for finding the reciprocal of a number. Read in a number N and find $\frac{1}{N}$ to three decimal places. Assume N > 0.

mem. add.	stored word
10	032
11	403
12	635
13	133
14	634
15	134
16	732
17	323
18	634
19	135
20	200
21	635
22	815
23	134
24	234
25	732
26	330
27	135
28	200
29	635
30	535
31	900
32	n
33	999
34	999-kn
35	$\frac{1}{n}$ to 3 dec. places

2. Program for finding N! Read in N, Print out N!

10	080	25	684	80	N
11	100	26	181	81	---
12	681	27	784	82	---
13	181	28	330	83	---
14	200	29	820	84	---
15	682	30	183		
16	403	31	681		
17	683	32	182		
18	100	33	200		
19	684	34	682		
20	182	35	180		
21	282	36	782		
22	683	37	339		
23	100	38	816		
24	284	39	581		

-
-
-
-
-
-

3. Program to test whether N is prime. Read N, Print out 001=yes, 000 = no, and then N

10	044	29	145
11	144	30	700
12	645	31	341
13	403	32	147
14	646	33	200
15	100	34	647
16	100	35	147
17	647	36	744
18	145	37	324
19	700	38	501
20	700	39	544
21	700	40	810
22	700	41	546
23	338	42	544
24	145	43	810
25	747	44	
26	329	45	
27	645	46	
28	824	47	

4. **Program for dividing a positive integer K by a positive integer C to print out the answer as quotient Q with remainder R on two cards.**

10	001
11	015
12	016
13	115
14	716
15	311
16	615
17	114
18	200
19	614
20	803
21	514
22	515
23	900
24	000
25	---K
26	---C

5. **Program for x^n where x and n have positive integral values and $x^n \leq 999$. Read in X, N. Print out X^n**

	00	001	21	174
→	01	072	22	700
	02	074	23	330
	03	174	24	674
	04	700	25	811
	05	326	26	500
	06	700	27	900
	07	328	28	572
	08	674	29	900
	09	172	30	573
	10	673	31	900
	11	173	32	000
	12	700	33	
	13	673	-	
	14	319	-	
	15	132	-	
	16	272	-	
	17	632	72	---(x)
	18	811	73	---
	19	132	74	---(n)
	20	673		

B. Symbolic Programming

1. Introduction

The languages which are really understandable to a computer are awkward for a man. Even when he is talking to the machine about numerical problems such as the ones in this chapter, machine code is not a natural one for the man to use. What does he care about the numerical address of the cell in memory where a partial sum is kept? Or that, to the computer, "2" means "add" rather than "subtract"? The first purpose of this chapter is to show that man need not stoop to the level of talking to the machine in machine code, but that he may instruct it in a language more nearly his own. Programs written in this new language are said to be written in symbolic code are we shall see shortly what this language is and what its advantages are.

In symbolic code the machine-language operating codes are expressed as ordinary English words that, in turn, are compressed into convenient abbreviations known as "mnemonics", as shown in the following table. (Fig. 1)

Machine Operating Code	Meaning In Ordinary Language	Mnemonic
x = 0	Input	INP
x = 1	Clear & add	CLA
x = 2	Add	ADD
x = 3	Test accumulator contents	TAC
x = 4	Shift	SFT
x = 5	Output	OUT
x = 6	Store	STO
x = 7	Subtract	SUB
x = 8	Jump	JMP
x = 9	Halt & reset	HRS

Fig. 1 Table of correspondence between operation codes and the mnemonics used in symbolic code.

Several distinct steps in the writing of a program to tell a computer how to solve a problem can be distinguished. First an algorithm or explicit set of rules for solving the problem should be determined and documented in a form convenient for a human being to understand. A useful tool in the document of an algorithm is a flow chart. Next, the flow chart is translated into a program which uses symbolic rather than machine code. Then the symbolic program must be converted to a corresponding program in machine code, since that is all that the computer can understand. Finally, of course, the program must be loaded into the computer and executed. In the next section we follow the sequential use of a flow chart, symbolic code and machine code.

2. A program to determine the largest of a set of integers

Writing the Program in Symbolic Code

Let us assume we have an indefinitely large number of input cards on each of which is written a positive integer. The problem is to find which card has the

largest integer in a given sequence or set of cards. First let us imagine how the job might be done by hand.

We begin with the tentative assumption that the first number (on the top input card) is the largest, and accordingly we put it aside as a tentative largest number. Now we take the next card on the stack and compare it with the largest card. If this next card turns out to have a bigger integer, we use it to replace the largest card. Following this procedure we keep picking out the card with the largest integer - and we continue doing this until we have examined all the cards in the set.

How do we know when we have arrived at the end of the set? Answer: We previously introduced a marker - a card with a negative integer. By testing the sign of each integer as it comes up for examination, we know from the appearance of a negative integer when we have arrived at the end of the prescribed run. Next we sketch out the program through which a computer might carry out the procedure we have described.

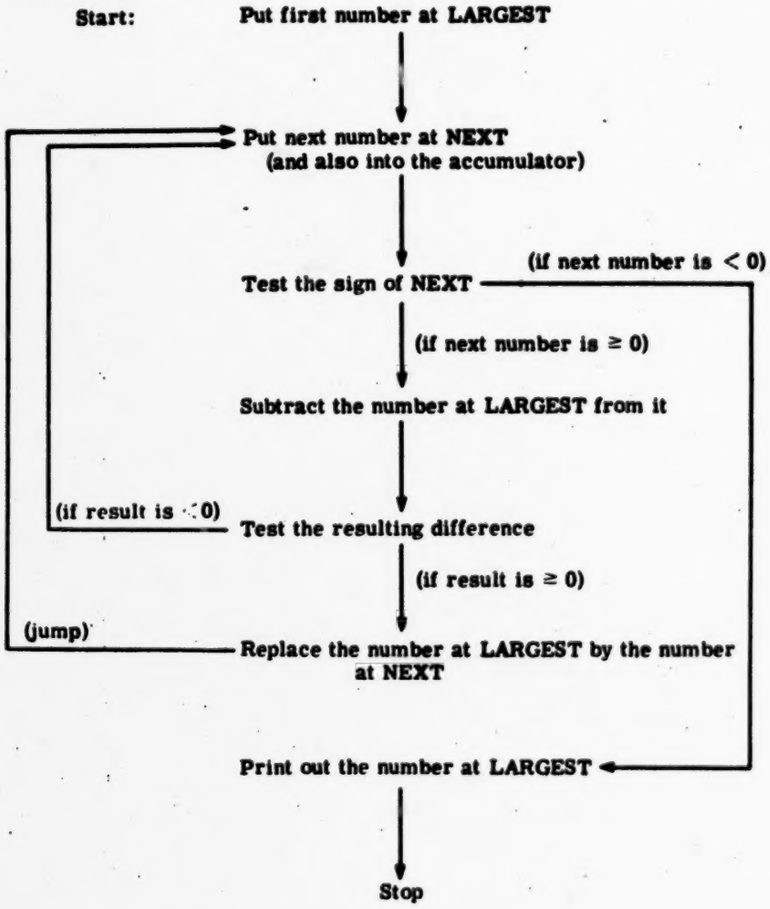

Fig. 2 Flow chart for finding the largest number of a set.

In the flow chart of Fig. 2 LARGEST and NEXT are our names for the addresses in memory at which are stored, respectively, the largest number found up to a given time in the process, and the next number being considered. Each new number is examined. If it is negative, this is an indication that we have reached the end of the set of non-negative numbers of the set, and we print out the largest number already found.

Another test is performed when we subtract the largest number already found from the new number we are examining. If the result is negative we know that the new number is no larger than the one we have already found, and we get the next number. If the result is non-negative we replace the previously-found largest number by the new one. These two tests each have two possible outcomes. (The operation code X = 3 will be used in the machine code for this example to allow the computer to take either the next sequential instruction or jump to another one, depending upon the result of the test.) The next stop is to rewrite the information which is contained in the flow chart in the form of a program in symbolic code. (Fig. 3)

A feature of the symbolic-code approach is that symbolic location names (such as ABOVE and LARGEST) are used to identify certain lines, that is, steps of the program. These names can be chosen arbitrarily and are used so that the programmer need not concern himself about the identity of the exact locations at which his program will finally be stored. For instance, the instruction "SUB LARGEST" means "Subtract from the contents of the accumulator the contents of the memory location at which we have stored the largest number which we have found so far;" we have agreed to give this location the symbolic name LARGEST. As another example the instruction "JMP ABOVE" means "Jump to the line of the program which we have given the name ABOVE; that is, the second line of the program." Notice that symbolic names are used to represent both data (LARGEST) and instructions (ABOVE).

Assembly

Symbolic coding is clearly much easier than machine coding. It relieves the programmer of the job of assigning actual memory addresses to the lines of his program and it allows him to think in terms of the convenient-to-remember mnemonics instead of the numerical operation codes. Before the symbolic program can be stored in the computer memory, however, it must be translated into machine code. This translation process is called assembly. In present times it is not usually carried out be hand, although we shall do it here that way. We shall want to illustrate that the assembly process is an orderly one, and therefore one which itself could be (and now usually is) carried out by a properly written computer.

Assembly customarily is accomplished in two steps, or passes. Each pass in a single sequential processing of the symbolic program. In the first pass memory locations are assigned to the lines of the program and consequently a correspondence between symbolic locations and memory locations can be established. These correspondences are listed in a symbol table. In the second pass the various instructions are assembled. That is, each mnemonic is replaced by the appropriate memory location listed in the symbol table.

```
10              INP     LARGEST
11    ABOVE     INP     NEXT
12              CLA     NEXT
13              TAC     BELOW
14              SUB     LARGEST
15              TAC     ABOVE
16              CLA     NEXT
17              STO     LARGEST
18              JMP     ABOVE
19    BELOW     OUT     LARGEST
20              HRS     00
21    LARGEST
22    NEXT
```

Fig. 3 A program in symbolic code.

For our problem, we assume that the first pass assigns addresses 10 through 22 to the lines of the symbolic program, as shown at the left edge of Fig. 3. On the second pass each line of the symbolic program is examined, mnemonics are replaced by operation codes (from Fig. 1) and symbolic names by memory address (from Fig. 3). The resulting program in machine code is given in Fig. 4. The words at addresses 21 and 22 have

Memory Address	Stored Word (XYZ)
10	0 21
11	0 22
12	1 22
13	3 19
14	7 21
15	3 11
16	1 22
17	6 21
18	8 11
19	5 21
20	9 00
21	(0 00)
22	(0 00)

Fig. 4 - An assembled program in machine code located with the initial instruction at address 10.

been assembled as zeros. However, it is actually unimportant what the initial contents are at these locations because when the program is executed they will be erased before new information replaces them.

3. Computing the sum of the first N positive integers

Writing the Program in Symbolic Code

As another example consider the writing of a program to compute the sum

of the first N positive integers (sum = N + ... + 2 + 1). The program is to work for all integers N for which the sum can be stored as one word in the computer memory. This means that N must be in the range from 1 to 45. (Why is this so?) The value of N is printed on and read from an input card; the resulting value of sum is to be printed on an output card.

A flow chart for our problem is given in Fig. 5. There are two quantities, sum and count, which are changed during the computation. (We shall use underlined lower case script to denote the contents at a particular address with the same symbolic location name. For instance, sum is the number contained at the machine address which has been assigned the name SUM.) The quantity sum at a given time has a value which is the partial sum of all the integers, from N downward, which have so far been added together. The quantity count is the largest integer which has not, up to that time, been added to the partial sum. The initial values of sum and count are set to zero and N, respectively. The updated values of count is tested immediately after it is decreased by one to detect when it first becomes negative. At that point the summing is stopped and the answer, sum is printed out. Until then the procedure alternately causes (i) the partial sum to be increased by the largest integer (count) yet to be added and (ii) this integer to be reduced by one.

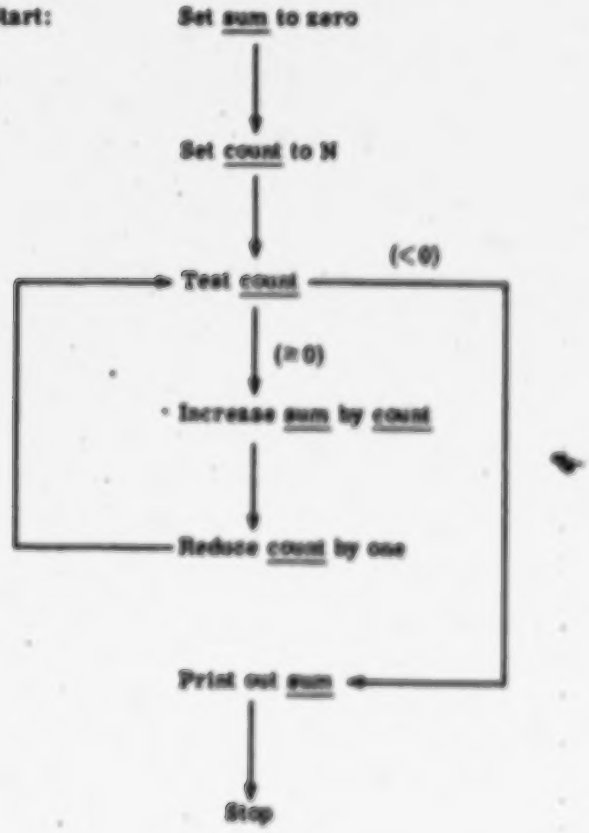

Fig. 5 Flow chart for summing the first N integers.

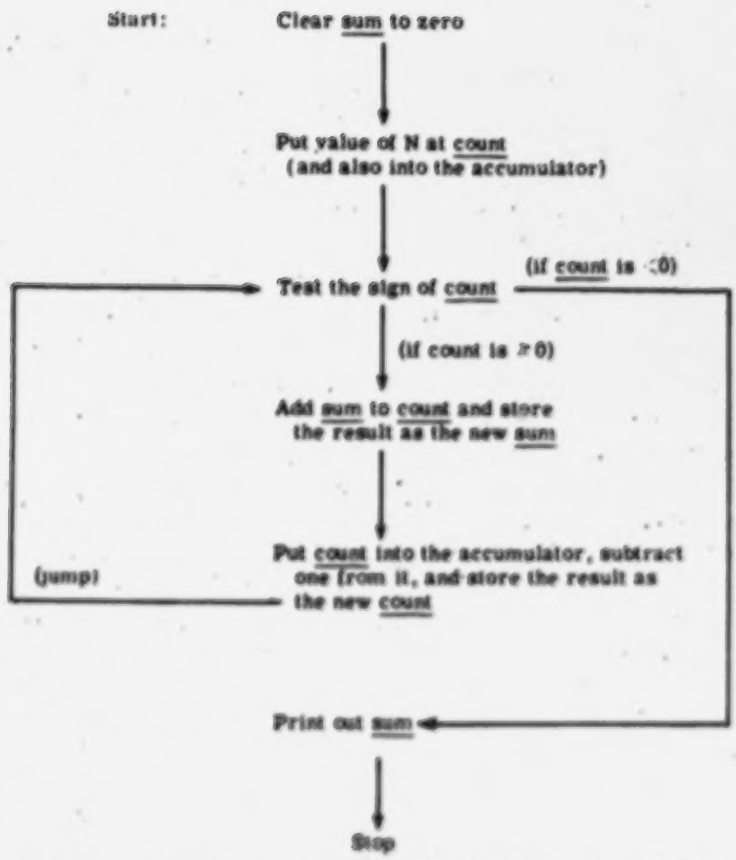

Fig. 6 - A more detailed flow chart for summing the first N integers.

The flow chart given in Fig. 5 is about as detailed a one as an experienced programmer would actually ever write for our problem. He would next write the program in symbolic code. For us it is valuable to write a slightly more detailed flow chart (Fig. 6) in which the terminology is quite close to that of symbolic code. We shall not discuss this new flow chart but shall leave it to the reader to verify that it is equivalent to the earlier one.

The symbolic program of Fig. 7 is, for the most part, self-explanatory. The comments are not themselves a part of the symbolic program, and no use of them is made in the assembly process. These comments are similar to those an experienced programmer would write to help him (and others) understand what each step of the program is to do. Even a simple program tends to look somewhat cryptic after the passage of time not only to others but also to the programmer who wrote it unless comments accompany the program.

The "SFT 03" instruction shifts the initial accumulator contents three digits to the right and is one of several possible ways of clearing the accumulator contents to zero. The instruction "SUB ONE" subtracts from the contents of the accumulator the contents of the memory address which has been given the symbolic name ONE. (The computer does not automatically understand the English word ONE. It is only because we have explicitly specified the contents at location ONE to be 0 01 that the effect is the one we want.) Fig. 8 is a corresponding program in machine code with the initial address arbitrarily chosen to be "25".

	Operation	Address	Comment
	SFT	03	Clear accumulator to zero
	STO	SUM	and store this zero at SUM.
	INP	COUNT	Copy value of N from input card into COUNT
	CLA	COUNT	and bring this same value to accumulator.
UP	TAC	DOWN	Test negativeness of the number at COUNT.
	ADD	SUM	If count is non-negative, add sum to it
	STO	SUM	and store the result as the new sum.
	CLA	COUNT	Get count again,
	SUB	ONE	subtract one from it,
	STO	COUNT	store as the new count and
	JMP	UP	go back to earlier instruction.
DOWN	OUT	SUM	If count is negative, print out sum
	HRS	00	and stop.
SUM			
COUNT			
ONE	0	01	

Fig. 7 - A symbolic program corresponding to the flow chart of Fig. 6.

Memory Address	Stored Word
	(X YZ)
25	4 03
26	6 38
27	0 39
28	1 39
29	3 38
30	2 38
31	6 38
32	1 39
33	7 40
34	6 39
35	6 39
36	5 38
37	9 00
38	(0 00)
39	(0 00)
40	0 01

Fig. 8 - Assembled program in machine code.

Assembly in Relocatable Form

In general, several programs may be stored in the memory of a

computer simultaneously. It is clear that no two should be assigned overlapping sets of addresses. It is not generally known at the time a program is assembled where it is to be stored in memory. Therefore, programs are often assembled in relocatable form. That is, they are assembled as if their initial address were always to be the "zero" address (in our computer, 00). Additional information is probided during the assembly process to show which words have addresses which should be changed when the program is relocated by another initial address.

Memory address	Stored Word
	(X YZ)
00	4 03
01	6 13 ✓
02	0 14 ✓
03	1 14 ✓
04	3 11 ✓
05	2 13 ✓
06	6 15 ✓
07	1 14 ✓
08	7 15 ✓
09	6 14 ✓
10	8 04 ✓
11	5 13 ✓
12	9 00
13	(0 00)
14	(0 00)
15	0 01

Fig. 9 - Assembled program in relocatable form

Our program assembled in relocatable form is shown in Fig. 9. The checked lines show instructions which would have to have their addresses changed when the program is relocated. For instance, the number "25" would have to be added to all of these (see Fig. 8) if the program were to be stored with "25" as the initial or "base" address. In general, instructions which have a symbolic name in the address component of the word will be checked.

Some instructions, such as "SFT 03" and "HRS 00" are not modified when the assembled program is relocated. In the first case because "03" does not refer to an address in memory but rather to how a number in the accumulator should be shifted. Since this shifting is independent of where the stored program is located in memory, its address component will be unchanged when the program is relocated. In the second case "HRS 00" is a standard way of stopping a program and therefore the "00" should not be changed when the program is relocated.

In general, the numbers assembled where data is to be stored should not be changed when a program is relocated. In particular the contents (001) at the address which we gave the symbolic name ONE should not be changed. If those contents were changed, the execution of the instruction "SUB ONE" would cause some number other than "001" to be subtracted.

4. Subroutines

How long does it take to program a computer? Answer: a few hours if the problem is simple and the programmer skilled. But if the problem is complicated, such as that of calculating the trajectories of a satellite, the job may occupy all the attention of a skilled team of programmers for many months. Even so, it would take them many more months were it not for the fact that they did not have to work out every detailed sequence of events. When the desired sequence involves a frequently-required routine operation -- such as that of multiplying m by n or finding the area of a polygon -- the programmer calls on a "subroutine", a program written by him or someone else and kept in a library of similar often used programs. A program to solve the physics problems involved in precisely orbiting a satellite may call upon the assistance of scores of subroutines. Complex tasks are often broken down into sections to be programmed by different people as subroutines. Or one person may similarly divide his task into independent sections which he will program at different times. The following sections lead up to section 7 which covers some considerations involved in subroutines and their use.

5. A Program for Finding Remainders

First we will solve a rather straight forward problem whose program will become a subroutine. Sometimes it is possible for a program to work properly for certain types of input data and not at all correctly for other types. In order to illustrate this fact we shall write a flow chart for a program which has as its input the numerator and denominator of a fraction and which returns as its output the remainder which results when the denominator is divided into the numerator. For instance; if the numerator is 23 and the denominator is 9 the remainder which the program should compute is 5 since 23/9 = 25/9. A flow chart which describes a program which would accomplish this task is given in Fig. 10.

The remainder we want is either the numerator itself or the numerator after the denominator has been subtracted from it several times. We will determine how many times to stubract the numerator by testing the difference between the most recently calculated value of <u>remain</u> and the value of <u>denom</u>. When this difference becomes negative we know that the most recent value of <u>remain</u> is the one we want.

If the numerator and denominator are both positive and the numerator is larger than the denominator, the algorithm, or rule, represented in the flow chart would operate as follows. Assume that the numerator is 23 and the denominator is 9. The first computation of <u>remain-denom</u> gives 14. Since this value is not negative we shall replace the original numerator by a new numerator, 14, and try again. The next computation of <u>remain-denom</u> gives 5. Since this value is still not negative we shall replace the present numerator by the revised numerator, 5, and try again. This time <u>remain-denom</u> has the value -4. Since this value <u>is</u> negative we shall print out the most recent value of remain (5) as the answer.

If the numerator and denominator are equal (say both have the value 7) the following operation would occur. The initial computations of <u>remain-denom</u> yields zero. Since this value is <u>not</u> negative we replace <u>remain</u> by the value zero.

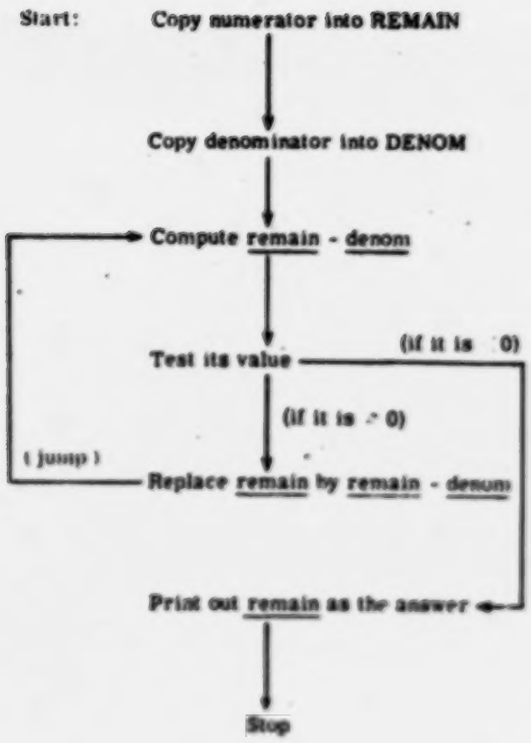

Fig. 10 - Flow chart for computing a remainder

The second computation of remain-denom gives -7 and because this number is negative we print out the most recent value of remain (0) as the desired answer. If the numerator and denominator are both positive with the numerator smaller than the denominator the correct answer will again be given.

If the numerator is positive (say 11) and the denominator is negative (say -7) the initial computation of remain-denom would give 18. Since this number is not negative we replace the original numerator by 18 and try again. The new value remain-denom is 25. Therefore we update the value of remain to 25 and try again. By repeating the rules represented in the flow chart we find the consecutive values of remain become more and more positive (11, 18, 25, 32, 39, ...) and the test of remain-denom will never allow an answer to be printed out. In fact, the computer would never stop, unless some one became suspicious that it might be "in a loop" and stopped it manually (or unless it burned out after decades of continuous use).

If the numerator is negative (say -11) and the denominator is positive (say 7) the first computation of remain-denom would yield -18. Since this number is negative our program would print out -11 as the answer. Under these circumstances the computer would stop but its answer would be incorrect. The reader may wish to find out what happens when other choices of a numerator and a denominator are used with the procedure we have described. (For instance, what happens when the denominator has the value zero?) This will not be done here. We merely wnated to show that, in general, one must know the limitations of a given program if the answers it delivers are to be trusted. We shall give the program which computes the remainder only for positive numerators and

denominators.

A symbolic program for the previous flow chart is given in Fig. 11. For the most part it is straightforward. However, a little attention should be given to how the contents of the accumulator change. We shall assume that the numerator is much larger than the denominator. "CLA REMAIN" brings the original numerator to the accumulator. "SUB DENOM" reduces the number in the accumulator by the amount of the denominator. The testing of the accumulator contents does not change them, nor does the "JMP AGAIN" instruction. Therefore, when the "SUB DENOM" instruction is executed for a second time the denominator is subtracted from the accumulator contents, and these contents have not changed since the instruction "SUB DENOM" was last executed.

```
        INP   REMAIN   . Copy the numerator into REMAIN
        INP   DENOM      and the denominator into DENOM.
        CLA   REMAIN     Bring remain to the accumulator
AGAIN   SUB   DENOM        and subtract denom from it.
        TAC   FINIS      Test the difference and,
        STO   REMAIN       if non-negative, store as new remain
        JMP   AGAIN        and try again.
FINIS   OUT   REMAIN     If difference is negative, print remain
        HRS   00
REMAIN
DENOM
```

Fig. 11 - Symbolic program for finding a remainder

```
        INP   R
        INP   D
        SFT   03
        STO   Q
ABOVE   CLA   R
        SUB   D
        TAC   BELOW
        STO   R
        CLA   Q
        ADD   ONE
        STO   Q
        JMP   ABOVE
BELOW   OUT   Q
        OUT   R
        HRS   00
Q
R
D
ONE     0     01
```

Fig. 12 A symbolic program which the student should analyze

As an exercise the reader should assemble the machine coded program for Fig. 11 in relocatable form and understand which, and how, instructions need to have their address components changed when the program is located with its first instruction at, say, memory location 53.

As another exercise analyze the symbolic program shown in Fig. 12. It is very closely related to the one in Fig. 11. What does this program do? How would you assemble it in relocatable form?

6. A Program for Finding Greatest Common Divisor

One of the best known numerical procedures in one which leads to the determination of the greatest common divisor for two positive integers. (The greatest common divisor is the largest number by which each of the two integers can be divided without leaving a remainder. For instance the G.C.D. of 189 and 266 is 7.) This procedure is known as the Euclidean algorithm.

The Euclidean Algorithm

The Euclidean algorithm is illustrated in the table of Fig. 13 for the two numbers 411 and 540. Call these numbers p and q, respectively. Compute the remainder, r, which is obtained when q is divided into p; this value of r is 411. Next compute a remainder for the pair of numbers 540 and 411; the new remainder is 129. Continue this procedure using as values of p and q for each computation the values of q and r from the previous computation. Sooner or later a zero remainder will be computed. The desired G.C.D. is the corresponding value of q. In our example this value is 3.

Given pair of numbers: 411 and 540

p	q	r	
411	540	411	(first computation)
540	411	129	(second computation)
411	129	24	(third computation)
129	24	9	(fourth computation)
24	9	6	(fifth computation)
9	6	3	(sixth computation)
6	3	0	(seventh computation)

answer

Fig. 13 - An example of the use of the Euclidean algorithm to determine the greatest common divisor for a pair of positive integers.

Notice, from the first two lines of the table of Fig. 13, that it makes no difference whether the initial value of p is larger than that of q, or vice versa. We shall, however, apply the algorithm only to pairs of positive integers. If we do this the values generated for the sequence of remainders will also always be positive (until the final computation for which the remainder is zero).

A flow chart which represents the algorithm is given in Fig. 14. The reason for testing - r rather than r is that the TAC operation available in our

computer tests whether a number is negative or non-negative (rather than whether it is non-positive or positive). We can see from the example of Fig. 13 that the value of r is non-negative up to and including the seventh computation of a remainder. The value of -r, however, is negative preceding the seventh computation and non-negative (in our case, zero) just after the seventh computation. We can therefore use a test of -r to determine when the algorithm should be terminated.

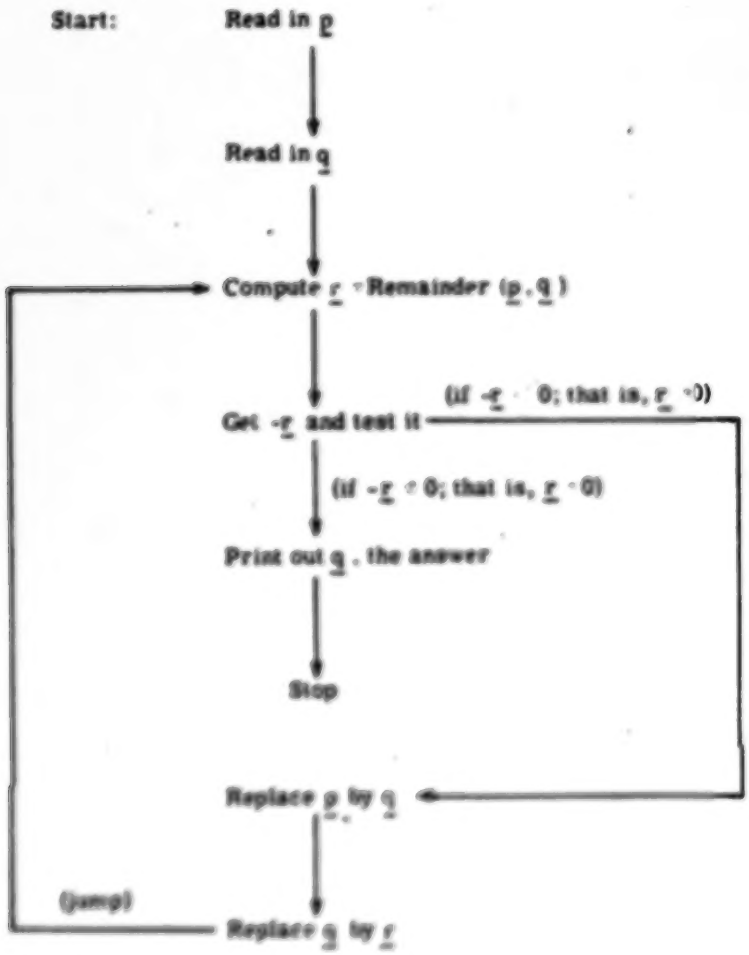

Fig. 14 - A flow chart for the Euclidean Algorithm.

The Program in Symbolic Code

A program in symbolic code which incorporates the procedure shown in the flow chart is shown in Fig. 15. For the time being the reader should not concern himself about the section which computes r from p and q. There are various ways of replacing it by appropriate instructions. These will be the subject of a later section of these notes.

The four lines of instruction starting with the one given the symbolic name ARTIC deserve special attention. Their purpose is to move the present value of q into P and the present value of r into Q. A mistake could very easily be made here. What would have been the result had we first tried to move r into Q and then Q into P? One method of programming this would be to write in sequence the four instructions:

```
ARTIC     CLA R
          STO Q
          CLA Q
          STO P
```

The first of these would bring r to the accumulator. The second would copy that value into Q. The third would clear the accumulator and bring that same value back into the accumulator. And, finally, the fourth would store it at P. The next result would be to copy the value of r into P. This is not what we wanted to do. The method we have shown in Fig. 15 is correct.

```
          INP   P          Copy in the values of
          INP   Q            the two integers.
MORE      This section computes
          a remainder r using
          p as the numerator and
          q as the denominator.
          SFT   03         Clear the accumulator to zero.
          SUB   R          Subtract r; this places -r in
          TAC   ARCTIC       the accumulator. Test it.
          OUT   Q          If r=0, print out q,
          HRS   00           and stop.
ARCTIC    CLA   Q          If r>0, get q and
          STO   P            store it at P; then
          CLA   R            get r and
          STO   Q            store it at Q.
          JMP   MORE       Then compute a new remainder
P
Q
R
```

Fig. 15 - A symbolic program for the Euclidean Algorithm.

Imbedding One Program In Another

Having already gone to the work of writing a program which determines the remainder when a numerator and denominator are given, we do not want to have to do it again when it is needed as a part of the program which computes the greatest common divisor. A straightforward way of solving the problem is to make minor modifications in the program for finding a remainder (Fig. 11) and to substitute it into the section needed in the program for the Euclidean algorithm (Fig. 15). Care must be taken to make certain that the symbolic names used in the remainder program match those used in the program for the Euclidean algorithm. In addition other minor changes have to be made because the remainder program was originally written to be used with data supplied from input cards; however, in Fig. 15 we have already copied the desired data into memory locations by the time we wish to compute a remainder.

The following represent the changes which must be made in the remainder program:

(i) INP REMAIN is to be replaced by CLA P / STO R

since the desired numerator is already stored at P.

(ii) INP DENOM is to be omitted

since the denominator, Q, has already been copied into memory.

(iii) OUT REMAIN is to be omitted

since the calculated remainder is not the result we want printed out, but only a necessary intermediate result. The symbolic name FINIS should, however, still refer to the instruction immediately following the JMP instruction.

(iv) REMAIN should be replaced by R and DENOM replaced by Q.

The new program, with the section which computes the remainder r imbedded in the program for the Euclidean algorithm, is shown in Fig. 16. Notice that the indicated instruction "CLA R" can be omitted since it merely requires the computer to bring to the accumulator from R the quantity which had just been stored at R.

```
        INP   P
        INP   Q
MORE    CLA   P
        STO   R
        CLA   R ←— (omit)
AGAIN   SUB   Q
        TAC   FINIS
        STO   R
        JMP   AGAIN
FINIS   SFT   *33
        SUB   R
        TAC   ARCTIC
        OUT   Q
        ERS   33
ARCTIC  CLA   Q
        STO   P
        CLA   R
        STO   Q
        JMP   MORE
P
Q
R
```

Fig. 16 - A completed program for the Euclidean Algorithm.

The adding of the program section which computes remainders was quite straightforward but the resulting total program has a complexity which is, roughly, the sum of the complexities of the two programs from which it was formed. The imbedding procedure which we have illustrated also required that we go back and reconsider, and rename if necessary, the individual instructions for the remainder program.

Extension of the idea of fully rewriting programs when they are imbedded in others would mean that in writing a large program we would have to think about the details of each smaller program which it contained. Such a procedure would nearly guarantee that we would never be able to build efficiently upon our past programming efforts. To write a program to solve a new problem we would have to understand at some given time all of our applicable programming efforts for the smaller problems it contained. This is obviously impractical, if not impossible. Subroutines to the rescue!

7. The Writing and Calling of Subroutines

What a Subroutine Looks Like

In this section we show that the remainder program can be rewritten as a subroutine in a standardized way so that a single copy of it stored in computer memory can be used not only by the program for the Euclidean algorithm but also by other programs as well. A useful feature of appropriately written subroutines is that they need not be stored in memory at addresses which are contained within, or even adjacent to, the set of addresses at which the main program is stored. It is necessary to have relocation information before a subroutine can be placed into a specific set of contiguous addresses in memory. This information, as we have said before, is usually generated during the assembly process.

Fig. 17 - Illustrating the "call" of a subroutine by another program.

The subroutine and main program in Fig. 17 illustrates one possible method of transferring control from one program to another and back again. We assume that these two stored programs occupy non-overlapping locations in memory but that otherwise their location is arbitrary. The part of the main program shown in a box is termed a calling sequence and it will be considered in detail later. The "working part" of the subroutine is shown between lines "a" and "b" and is a replica of the corresponding part of the program in Fig. 11.

Essential components of any calling sequence are methods for transferring control of the computer to the subroutine and for remembering what the instruction count was when control was transferred. That is, the computer must be able to jump from an instruction in one place in memory to one located somewhere else, and to remember from where the jump was made. The "manual" for our simple computer (see Chapter 5) specified that when the operation JMP occurs from a given location the next location number is stored in the right-most two positions at memory cell 99; the first position of that cell permanently contains the number 8. For instance, the execution of an instruction "JMP 73" stored at location 26 sets the instruction counter to 73 and stores the number 827 at location 99. We shall see shortly the utility of this feature.

Detailed Analysis of the Calling Sequence

Now let us examine in detail what the calling sequence does. The instructions "CLA Q" and "STO 98" get the contents of the memory cell named Q and place them in cell 98. The instruction "CLA P" brings the contents of cell P to the accumulator. "JMP $RMNDR" transfers control to the instruction named RMNDR, the first instruction of the subroutine. (The $ indicates that RMDR is a location in another program, which must be loaded along with the main program.) The execution of the "JMP $RMNDR" instruction also stores the location number of the "STO R" instruction of the main program in cell 99. For purposes of discussion we shall assume that the location of the "STO R" instruction is 27 and that location 73 (named RMNDR) contains the "STO REMAIN" instruction. (See Fig. 17).

Immediately following the execution of the "JMP $RMNDR" the accumulator still contains the contents of cell P. The first instruction (STO REMAIN) of the subroutine places those contents in the cell named REMAIN. The net effect has been to copy contents of the cell named P into the cell named REMAIN.

The next two instructions in the subroutine, "CLA 98" and "STO DENOM", bring the contents of cell 98 to the cell named DENOM. These contents, in turn, are the contents of the cell named Q. In other words the contents of cell Q have been copied into cell DENOM.

The accumulator and cell 98 have been used to communicate the parameters p and q from the main program to the subroutine. If there were only one parameter the accumulator only would suffice. If there were three or more parameters, cell 97 and those preceding it could be used in a way similar to the way we have used cell 98. The more parameters there are the longer the calling sequence must be.

The next two instructions, "CAL 99" and STO EXIT" are quite significant. The first brings the contents of cell 99 to the accumulator and the second places them into the cell named EXIT. The contents of cell 99 where the number 827;

therefore the contents of the cell named EXIT are 827. Recall, however, that the operation code "8" is the "jump" operation. Consequently the instruction contained at EXIT is now the equivalent of "JMP 27". The instruction, when executed, will return control of the computer to line 27 of the main program.

After the working part of the subroutine (the part between lines "a" and "b") is all executed, there is a transfer of control to the instruction "CLA REMAIN" and the result of the computation of the remainder subroutine will be brought to the accumulator. Then the "JMP 27" instruction stored at EXIT will be executed. Finally, the "STO R" instruction at line 27 of the main program takes the accumulator contents and copies them into the cell named R. The net result of the preceding several instructions is the transfer of control back to the main program and the copying of the answer remain into R. Following this the "SFT 03" and subsequent instructions in the main program are executed.

The main program may later require another use of the subroutine RMNDR because of the "JMP MORE" instruction. In that case events parallel to the ones demonstrated above occur. In fact, it is clear that a given subroutine may be called from several different places in the same program. Not only that, a subroutine may call other subroutines, because after control is transferred to a subroutine the information transferred via locations 99, 98, 97 ... is stored within that subroutine and those locations are free to be used again.

How a Subroutine is Used.

It is apparent that the use of subroutines is a powerful method by which the programs written by one programmer can be made available to another. The user of a subroutine need not concern himself with how the subroutine is written, but only upon how it is called. For instance, it is important that the writer of the main program know that his numerator should be stored in cell 98 and that he should jump to the subroutine with his denominator stored in the accumulator. It is equally important that he know that the subroutine will transfer control back to the main program with the results of its computation stored in the accumulator.

Notice also that the user of the subprogram never knows or cares what symbolic names are used in the subroutine. (Since subroutines are usually assembled separately it is even possible for the main program and the subroutine to use the same names. If the reader does not understand this point, he should not worry. There are many more advanced students who don't either!)

Whether it is practical to write a useful sequence of instructions as a subroutine instead of imbedding it in programs where it is needed largely depends on the length of the sequence. A very complicated or lengthy sequence of instructions which is used often should be written as a subroutine. A short or simple sequence should be imbedded in these programs where it is needed, especially if it is not much larger than the calling sequence which it would require.

Chapter B-1

MODELS

The following quote about Sir Isaac Newton might be used to kick off a discussion of models.

"As a schoolboy, he used all available pocket money to buy tools for model-making. Among other things, he constructed a water clock and a miniature windmill that could also operate on power supplied by a mouse whom he called his "mouse miller". Young Newton startled the local inhabitants by sending a paper latern aloft at night attached to the tail of a kite. He constructed overshot and undershot water wheels and performed various hydraulic experiments".

From "The West Can Win" by Donald Wilhelm, *Jr.* 1966

I. Objectives and Prerequisites

A. Objectives

1. Major objective--to show that models are universally used representions of the real world.

2. Minor objectives

a. To teach that models may have many forms.

b. To teach that models may have many values.

c. To teach that models may be static or dynamic.

d. To teach that models may be linear or non-linear.

e. To show that graphs are models and to introduce integration (area under curve).

f. To show that one model may represent several systems and conversely one system may require several models.

B. Prerequisites

1. The student should have mastery of geometry and algebra including simultaneous equations and exponential notation.

II. Major Ideas

There is one major objective for this chapter and six minor ones which contain the principal ideas intended to be communicated. They are as follows:

A. We wish to teach that <u>models are universally used representations of the real world.</u> Every thought, every description, (verbal or otherwise) is a model; they represent our ideas of what objects and relationships in the world around us are all about. One looks at another person--that person is the real world, and what exists in the mind of the observer is a model.

Models are <u>simplified</u> reality; they are manageable representations of the real thing. They contain the <u>essential</u> qualities of the system being modeled and so, if accurately formulated, can be said to be effectively equivalent to a high degree.

It must be emphasized, however, that all models are approximations to that which is modeled. They are formulated by observation and measurement in the real world, and they are filled out with data taken from the system under consideration, but they can never be completely equivalent for an entire system.

Satisfactory models are usually achieved by successive refinement. A preliminary model is designed, it is tested against the real-world prototype, then it is modified--so there is a continued process of successive approximations to a reasonably accurate and revealing fit. It is essential to alternate back and forth between the real physical world and the modeling domain. Without this continual testing and refining process, models can lead to misleading results, and if models are inaccurately conceived or too simply structured the results will be unrealistic and useless. Developed realistically and accurately, models are extremely important and useful tools which have far-reaching effects. The remaining six objectives are listed below as specific principal ideas the chapter is intended to convey.

B. Models may have many forms. Models start out by being conceptual--a set of ideas about some real-world system. They can then be expressed in many different but equivalent ways. The idea of equivalence can be seen by considering that the real-world system is a "black-box" having certain inputs and outputs. What is important is the functional relationships between inputs and outputs--What changes occur at the outputs as various signals are applied to the inputs. For equivalent functional representation, what is inside this or any other "black-box" is immaterial so long as the input-output relationships are analogous. Thus if we consider a real nerve cell, for instance, with its complicated stimulus-response relationships we can have many "black-box" equivalents. So long as the output signals change appropriately with specified input signals, it is immaterial whether what resides within the "black-box" is a real nerve cell, a string of words, mathematical expressions, a graphical plot, a programmed computer, electronic circuits, hydraulic or chemical systems, wheels, gears and levers, or green cheese.

Of the many different kinds of modeling vehicles available, there is generally little difficulty in making an appropriate choice for a particular problem. One generally chooses the most revealing and most economical.

Very often a mathematical model becomes quite complex and it is convenient to resort to a computer simulation. When there are many variables and many simultaneous equations to handle, the speed and flexibility of a computer (either digital or analog) provide a very powerful modeling vehicle.

In being able to manipulate numbers quickly, accurately, and flexibly, computers permit various modeling quantities and relationships to be easily handled and changed so as to run rapidly through the properties and predictions of many different versions of a model.

In this case, the programmed computer becomes a working model itself. It literally then can be a functioning representation of the cooling of a cup of coffee, the growth of world population, the vibration in an air conditioner, or even of another (difficult) computer.

Sometimes even the very flexible mathematical or computer simulation models are inconvenient or even impossible. The complex, nonlinear interactions of some systems are at times sufficiently intricate that the construction of special-purpose hardware (like an electronic or hydraulic analog) is much more appropriate. In such cases one introduces the electrical or fluid signals at the input of the model and observes its performance by measurements of the output.

C. Models have many uses. Models are used functionally as well as descriptively. They are employed systematically in engineering not only to describe a set of ideas but also to evaluate and predict the behavior of systems before they are actually built. They can save enormous amounts of time and can avoid expensive failures. Models permit the optimum design to be found without trying out many versions of the real thing. Examples are to be found in scaled-down functional models like those of aero-dynamic vehicles tested in wind tunnels, and in multi-variable network systems like models of population change for planning transportation systems.

Models are made of widely disparate real-world systems, from nerve cells to suspension bridges, from petroleum processing plants to rocket flights, and from the way in which eyes track a moving target to how a nuclear reactor goes critical. Have the students look for such example in newspapers and magazines.

Often the effects of a model reacts back on the real world, changing it. In planning a more effective transportation system, for example, a model may indicate the need for increased facility in a particular region. If that indication is put into practice, the region may then become even more populous, since with adequate transportation facilities, towns tend to grow larger more quickly.

D. Systems, and the models which they represent, may be either static or dynamic. Some models such as those which reveal the relationships between variables like height and weight, or those which show how air pressure and flow in the respiratory tracts of animals are related, are static. They demonstrate events in a system at one slice of time, and in this "snapshot" represent a situation in which there is no change.

Dynamic models, on the other hand, introduce the notion of changes in time. In these models which are more like a motion picture than a snapshot, variables which change in some orderly way are represented. Models of population change in a town or in the world, of epidemic speed, or a heating plant are all representative of dynamic systems.

E. Systems and models may be either linear or nonlinear. It is important to see that some systems are linear, such as height-weight ratios for a given age and sex, or between pressure and flow in a preumatic or

hydraulic system. In this case the output of a system or a model is directly proportional to the input, i.e., the relationship is linear and a graphical plot will be a straight line.

Many, if not most, systems in the real-world, however, are nonlinear. That the output is not relative to the input in a simple, constant-proportional way. Population growth, the build-up of a rolling snowball, and the cooling of a cup of coffee are all nonlinear processes. In these particular cases, the output of the system at any particular time is related to the input in such a way that it depends on the particular state of the system at that time; the relationship, therefore, is not constant, and a graphical plot is not a straight line.

Exponential change in time is an important kind of nonlinearity. It is extremely prevalent in nature and in engineering. The examples cited above are exponentially-behaving systems; growth and decay are proportional to accumulated size--that is, the larger a quantity becomes, the faster (or slower) it grows.

F. Integration involves the finding of an area under a curve. The idea of integration is introduced without explicit mention of the term (this topic is developed more fully in Chapter B-2, where it is related to analog computation.) It is shown how by adding up elemental parts (using historgrams) which lie under a curve one can compute the area; i.e., the accumulated value which the function described by the curve describes.

Included in this presentation, as well as in earlier parts of the chapter, is a demonstration of how line graphs (both linear and nonlinear) are constructed to fit data, and how smooth curves represent average characteristics. This is carried forward concurrently with mathematical notation and manipulation which illustrates again equivalence among verbal, graphical, and mathematical models.

G. Model applicability goes in two directions. Many models can represent one system. For example, an air conditioner can be described by a thermodynamic model which relates to heat transfer through the systems, a control model which represents the functions of thermostat, electrical parts, and wiring network, or a mechanical model which describes the moving masses, their mountings, and their vibrational and acoustical couplings. Each of course is a partial model which cannot represent the entire system, but each has great utility in permitting analysis, prediction, and design control of important subsystems of the whole ensemble.

Conversely, one model can represent many different systems. For example, exponential growth and decay describes the behavior of a large number of phenomena. Besides population, cups of coffee, and snowballs; such disparate things as the growth of living organisms, the spread of chain letters, coasting to a stop, accumulation of compound interest and the operation of nuclear reactors all behave according to exponential laws.

Similarly, inverse square attenuation, probability, gaussian distribution, and game-playing strategy represent models which have powerful applications to a wide variety of quite different real-world systems.

SUMMARY: The overall intent, then, of this chapter is to show how models are present in all of our consideration of the real-world, how they range from vague imprecise verbal constructs to highly accurate and revealing abstractions which can be implemented by many forms, and how models are used in engineering for analysis and design evaluation and prediction, thus leading to a more complete understanding and control of the real-world.

III. A-Text Divisions (14 class periods plus 3 labs)

Sect. 1.1 Introduction (1 class period) (Films 3, 4, or 5 will fit in here)

1. Definitions of a model--a description
   - a. Conceptual
   - b. Verbal
   - c. Pictorial
   - d. Graphical
   - e. Mathematical
2. Uses of Models
   - a. To describe
   - b. To evaluate
   - c. To predict

Sect. 1.2 The Graph as a descriptive model. (2 class periods)

1. Height vs. weight as verbral relationship.
2. Height vs. weight in tabular form.
3. Height vs. weight as graph
   - a. Averaging
   - b. Interpolating
   - c. Extrapolating
4. Height vs. weight as an equation.

Sect. 1.3 A Descriptive Model for Air Flow. (2 class periods)

1. Why an engineer might study air flow in animals
2. Gathering information (data)
   - a. Precuations for comfort of the animal
   - b. Pressure sensing devices (tranducers)
   - c. Assumption
   - d. Organization of data

1. Table
2. Graph

3. Derivation of mathematical model

Sect. 1.4. Dynamic model (3 class periods)

1. Population study
   a. Tabular representation
   b. Histogram
   c. Exponential growth
   d. Projection--extrapolation

Sect. 1.5. An improved population model. (2 class periods)

1. Limitations on predicting from models
2. Use of improved model to project need for
   a. Schools
   b. Roads
   c. Services
   d. Merchandise

Sect. 1.6. Model applicability (2 class periods)

1. One system (air conditioner) may require several sub-system models
2. One model may represent several systems
   a. Analog computer

Sect. 1.7. Model equivalence (1 class period)

1. Stages in development of a model
   a. Conceptual
   b. Symbolic (words or numbers)
   c. Simulation
      1. Computer
      2. Hydraulic
      3. Machanical
      4. Chemical

Sect. 1.8. Summary (1 class period as review of chapter)

III-B Laboratory Placement

Familiarization with Oscilloscope*

1.0 Introduction: One class period*

2.0 Experimental Procedure

2.1 Experiment 1: One laboratory period*

Procedures

1. Putting oscilloscope into operation
2. Intensity and focusing adjustments
3. Vertical and horizontal position controls
4. Sweep oscillator adjustments
5. Synchronization

2.2. Experiment 2: One laboratory period*

Procedures

6. Calibration of the sweep oscillator frequency
7. Amplitude calibration of vertical and horizontal amplifiers

2.3. Experiment 3: One laboratory period*

Procedures

8. Time calibration of the horizontal sweep
9. Waveforms of sound
10. Other uses for the horizontal axis deflection
11. The Z-Axis

*The familiarization experiments may be performed along with chapters A-4 and A-5 and can be worked in with the Cardiac experiments if the equipment is available.

C. Student Laboratory Experiments

1. One class period could be used for an introduction to the oscilloscope. A discussion of the basic principles of operation should preceed a demonstration of the use of the scope.
2. The teacher should be very familiar with the three experiments and should be certain that <u>all</u> pupils become equally familiar.
3. No parts of the familiarization experiment should be omitted as a thorough knowledge of the operation of the oscilloscope in a prerequisite to the following experiments:
   a. Analog computer Familiarization, Part A1.
   b. Analog Simulation of Physical Systems, Part A2.
   c. Sonar Ranging
4. More detailed comments cannot be made at the time of printing due to:
   a. Changes in the scope to be supplied
   b. Rewriting of the laboratory procedure to match the new scope.

IV. Demonstrations

A. As an introdution to modeling the teacher may wish to use the following item: (one extra day if used)

A consultant to a pipe line company that just completed a new line over rolling hill country was confronted with the problem of the pump motors burning out before oil was delivered at the terminal of the pipe line. In formulating his solution the consultant built a model as shown below.

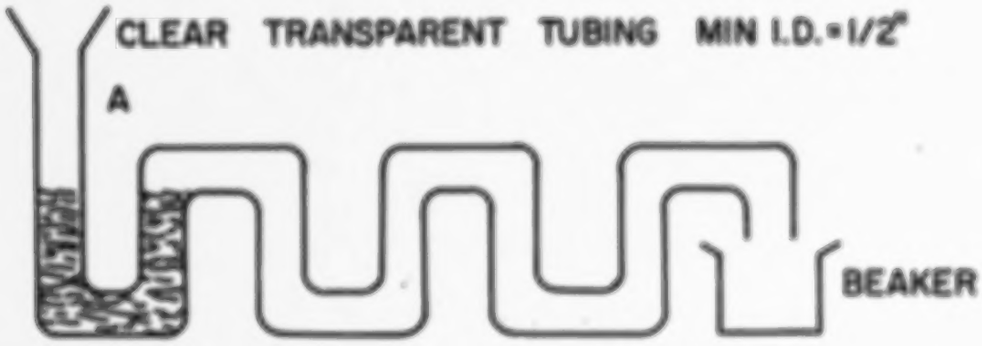

Colored water is added to the open tube until it stands in equilibrium as shown in Fig. 1. The pupils may then be asked, "What will be the height of the water level in tube A when the first drops are delivered to beaker B if we add more water to tube A?"

The pupils may be surprised to find that the liquid level in tube A will be more than twice the height of each "hill".

FIG 2

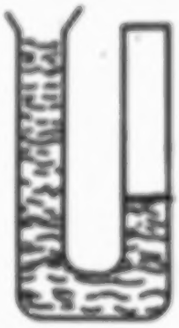

FIG 3

This phenomenon can be explained by using a second model. (Really a model of a model.) Assume the tube to be in the shape of a U with the trapped air in the right hand column. The fluids will be in equilibrium as shown in Fig. 3.

The consultant solved the "real life" problem by installing "bleeder valves" at the top of the hills where air was trapped in the pipes.

The demonstration apparatus can be easily assembled using approximately 12 feet of clear plastic tubing (be certain to use large, clean tubing--at least 1/2 inch inside diameter) and a piece of plywood to hold the tubing in the desired shape.

B. In discussing models the teacher may wish to show models of the DNA molecule and comment on its structure.

C. Industrial chemists use models in synthesizing new chemicals. The replacement of certain groups of atoms by other result in a new product with properties different from the original.

The teacher can show some transitions using molecular models. If these are unavailable, toothpicks and gum drops may be substituted for bonds and atoms. A simple transition that may be demonstrated is Methane CH_4 is converted to methyl alcohol CH_3OH by the oxidation of one hydrogen atom

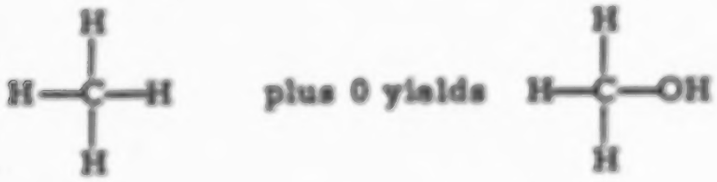

D. Transparent plastic models of bridges, airplane wings, etc., may be viewed in polarized light. When the transmitted light is passed through a second sheet of polarizing material, points of stress will be evident. An overhead projector, two sheets of polarizing material and the transparent plastic model will enable the entire class to view the areas of stress.

V. Homework, Problems and Solutions

A. Homework problems and answers

Relative difficulty of problems found in Chapter B-1:

EASY	MODERATE	DIFFICULT
*4, 7	*1, *5, *6, *8	2, 3*

*Key Problems to be completed by all students.

B-1.1 A more modern version of the six blind men and the elephant is suggested by the following problem. A printed capital letter of the English alphabet is scanned photoelectrically and the resultant signal is converted into digital form and read into a digital computer. Six subroutines in the digital computer inspect it. The first states that the letter is like an R because it has two ends; the second shows that it is like a W in that it would hold rain in one pocket if it were held upside down; the third finds that it is similar to an H because it has one pocket to hold rain from above; the fourth and fifth both find that it is like an O because it has no pockets on right or left; the sixth discover that it is like a C (and not an R) because there are no completely enclosed regions. Combining these six models of the letter, determine what it is.

Answer: The only possibility is N.

B-1.2 A paint brush has just been used and the owner wishes to clean it. After the brush has been scraped against the side of the paint can, it still contains 4 fluid ounces of green paint. The owner dips it into a quart of 32 fluid oz. of clean solvent and stirs well until the diluted paint solution in uniform. After draining, the brush still holds 4 fluid ounces, part of which is paint and part solvent, since the diluted solution is uniform. The process is repeated with a fresh quart of solvent.

(a) How much paint is left after 5 solvent baths?

(b) Prepare a table and plot a curve of the amount of paint remaining after each rinse. What kind of curve is this? Will the paint brush ever get completely clean? Why or why not?

Ans. (a) After one rinse the entire uniform solution is comprised of 4 ounces of paint and 32 ounces of solvent; i.e. the strength of the mixture is 4/36, or roughly 11%. After draining, the brush contains (4)(4/36) = 4/9 ounces of paint. With the second dilution, the mixture is (4/9)/36 = 4/81, or roughly 4.9% paint. The paint left after 5 rinses is $4/(9)^5$ ounces.

Ans. (b)

Dip Number	Paint in Brush before Dip (oz)	Fraction of paint in mixture	Paint in Brush after dip (oz)
1	4	4/36	4/9
2	4/9	(4/9)/36	4/81
3	$4/(9)^2$	(4/81)/36	4/729
4	$4/(9)^3$	$(4/(9)^3)/36$	$4/(9)^4$
5	$4/(9)^4$	$(4/(9)^4)/36$	$4/(9)^5$

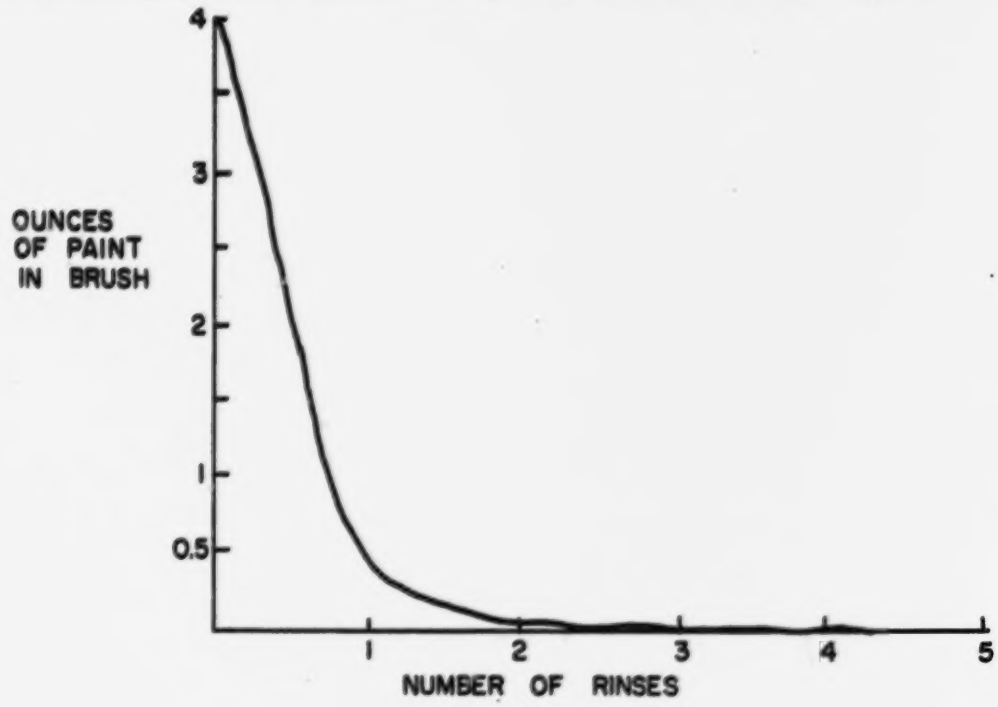

B-1.11

The curve, is exponential.

The paint brush will never get completely clean until just one molecule of paint is left and it happens to remain in the solvent when the brush is removed. So it is with all decaying exponentials which asymptotically approach the limit but theoretically reach it. Practically, of course, the limit is reached; a paint brush will get completely clean and coffee will cool to room temperature in a finite time because no process is really continous. A point is reached where the random variations in the physicel system swamp out the residue left in the exponential process.

B-1.3 You are served a hot cup of coffee at 200°F and a cold container of cream at 40°F, and you do not intend to drink the coffee for 10 minutes. You wish it to be as hot as possible at that time. Assume that the coffee cools as shown in Fig. B-1.18A and that the cream container stays at the same temperature.

(a) Determine the temperature of the coffee at t = 5 and t = 10 minutes.

(b) If a volume V_1 of coffee at temperature T_1 is mixed with a volume V_2 of cream at temperature T_2, assume that the temperature of the mixture is $(T_1V_1 + T_2V_2)/V_1 + V_2)$. What would the temperature of the mixture be if 1 fluid ounce of cream is added to 6 fluid ounces of coffee at t = 10 minutes?

(c) Now assume that the cream is mixed with the coffee at t = 0. What is the temperature T_o of the mixture at that time?

(d) The cooling curve of the mixture is similar to that of Fig. B-1.18A, except that it begins at the temperature T_o as calculated in part (c) above and always lies $(T_o - 75)/(200 - 75)$ of the distance between the given curve and the straight line showing room temperature. What will be the temperature of this mixture at t = 10 minutes?

(e) Will a hotter cup of coffee result from adding the cream first or later?

Ans. (a) From Fig. B-1.18A, the temperature at t = 0 is 200°F; at t = 5 minutes, T = 151°F; at t = 10 minutes, T = 121°F. [The equation of the curve is $T = 75 + 125\ e^{-t/10}$].

Ans. (b) T = (121 x 6 + 40 x 1)/7 = 109.4°, or 109°.

Ans. (c) T = (200 x 6 + 40 x 1)/7 = 177.1°, or 177°.

Ans. (d) $(T_o - 75)/200 - 75) = 102/125 = 0.815$
At t = 10 minutes, T = 75 + 0.815 (121 - 75) = 113°
[The equation of the new curve is $T = 75 + 102\ e^{-t/10}$].

Ans. (e) Add cream first to get hottest coffee at t = 10 minutes, since 113° is greater than 109°.

Comment - There has been considerable discussion concerning this type of problem. Its' use here is to illustrate modeling. The problem involves many complex variables. The validity of the model may be challenged, thus stimulating discussions and suggesting experiment.

B-1.4 A man receives his weekly salary of $150 every Friday and in paying his various obligations spends half of the amount he has in his pocket each day.

(a) How much money will he have left on the following Friday?

(b) Sketch a graph of his current funds versus the day of the week.

(c) If he received $300 every other Friday, would he be in better or worse shape on the next payday?

Ans. (a) $\$150\ (0.5)^7 = \$1.17$ (same answer is obtained by dividing by two, rounding off to nearest 1¢, where 1/2¢ is raised or lowered to nearest even cent.)

Ans. (b)

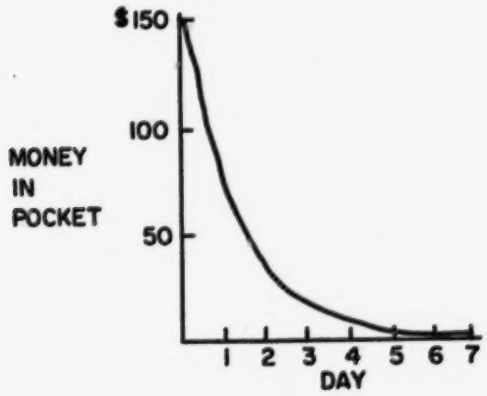

Ans. (c) $\$300(0.5)^{14} = \$0.02$ (same answer working to nearest 1¢).

B-1.5 The half-life of radioactive decay is the time in which the amount of the given radioactive material decreases by a factor of two. Radioactive carbon 14 has a half-life of 5700 years, but let us assume that it is 5000 years in this problem to allow simpler calculations. Carbon 14 is created by the action of cosmic rays on the atmosphere, and the amount remains constant with time. Growing plants, and the animals that eat the plants, absorb carbon 14 during their life, but the process stops when the plant or animal dies. Radioactive decay then causes the relative amount of carbon 14 to decrease. Measurement of the radioactivity of fossils permits an estimate to be made of the time at which they died.

(a) By what factor will the amount of carbon 14 decrease in 50,000 years?

(b) Approximately how old is a fossil bone in which the amount of carbon 14 is 0.1% of its initial value?

(c) Sketch a curve showing the amount of carbon 14 left in an object as a function of time.

Ans. (a) $50,000/5000 = 10$; $(0.5)^{10} = 1/1024$ remaining, or $\frac{1023}{1024}$ decrease.

Ans. (b) 0.1% is very closely 1 part in 1024. Therefore 50,000 years.

Ans. (c)

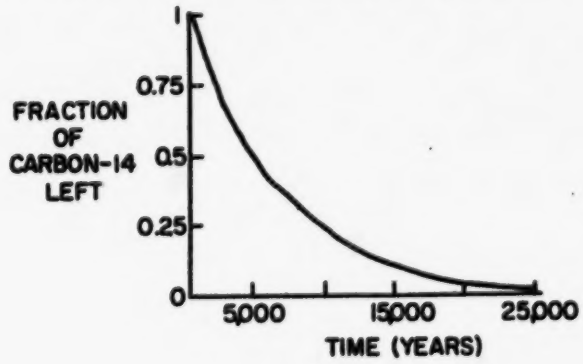

B-1.6 Let us approximate a human body by a cylinder. Since the proportions of the body stay relatively constant as it grows, a tall cylinder will have a larger diameter than a short one. We shall assume that the height of the cylinder is always 7 times the diameter. Thus, the cylindrical approximation of a 6-foot man will have a diameter of 6/7 foot and a volume of $\pi R^2 H$, or about 3.5 cubic feet. But since weight is directly proportional to volume, the number of cubic feet in the cylinder represents the weight for any particular height. If the cylinder is composed of water (which weighs 62.4 pounds per cubic foot) the 6-foot equivalent will weigh about 216 pounds.

(a) Compute the weights for equivalent cylinders whose heights are 2, 3, 4, and 5 feet. Plot the results, including 6 feet on a graph showing height versus weight.

(b) What kind of curve is this? How does it compare to that of the straight-line-average fit of Fig. B-1.3? Discuss any discrepencies and the validity of the earlier model in light of the new one.

Ans. (a)

2 feet gives 8 lbs.

3 feet gives 27 lbs.

4 feet gives 64 lbs.

5 feet gives 125 lbs.

6 feet gives 216 lbs.

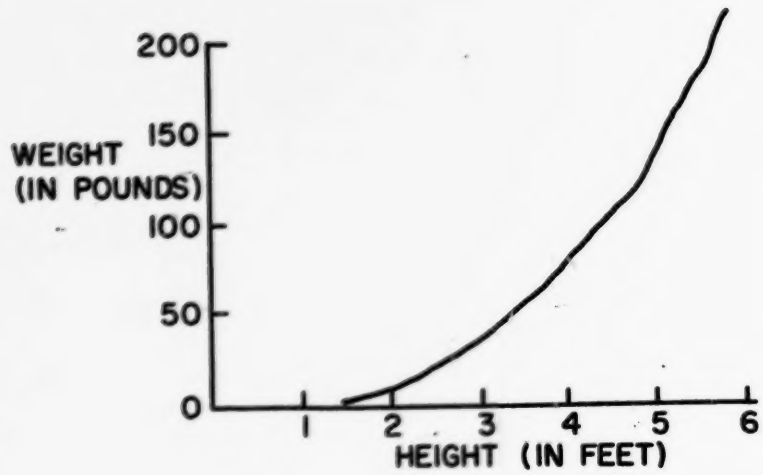

Ans. (b) Since we are dealing with volume, weight goes up as the cube of the linear dimensions; i.e., $W = kH^3$, so the curve is cubic.

The earlier model (Section B-1.2) was adequate as a linear approximation only because a small part of this curve was represented; the portion from 5 feet to 6 feet is close enough to linear that such a straight line fit is not too far off. This also illustrates the error pointed out in the text where unwarranted extrapolation led to meaningless results. Here a reasonably accurate theoretical model shows how real-world measurements could be expected to turn out for earlier portions of the height-weight curve.

B-1.7 List and discuss some systems like the air-conditioner example which can be described by several different models.

1. Automobile (mechanical, electrical, hydraulic, cooling system, fuel system, engine)

2. House (structural, ventilating, electrical, heating)

3. Human (structural, respiratory, circulatory, digestive, nervous, senory)

B-1.8 Experimental data on the growth of a population of yeast cells are given in the accompanying table.

Time (hours)	Number of Cells
0	6
2	10
4	48
6	117
8	234
10	342
12	397
14	428
16	438
18	442

(a) Plot a graph of the number of cells versus time in hours. What is the population at 9 hours?

(b) The shape of the curve is exponential at first as the cells multiply, but it soon levels off as the supply of food becomes limited. The curve is called a sigmoid. What would you estimate the population to be at 30 hours?

(c) Although you estimate may be an accurate one, based on the tabular models above and its graph, it is probably not correct in the real life of a yeast colony. If the table were continued, it would show that the population decreases somewhat as the environment becomes poisoned. During what time intervals is the rate of growth a maximum and a minimum?

Ans. (a)

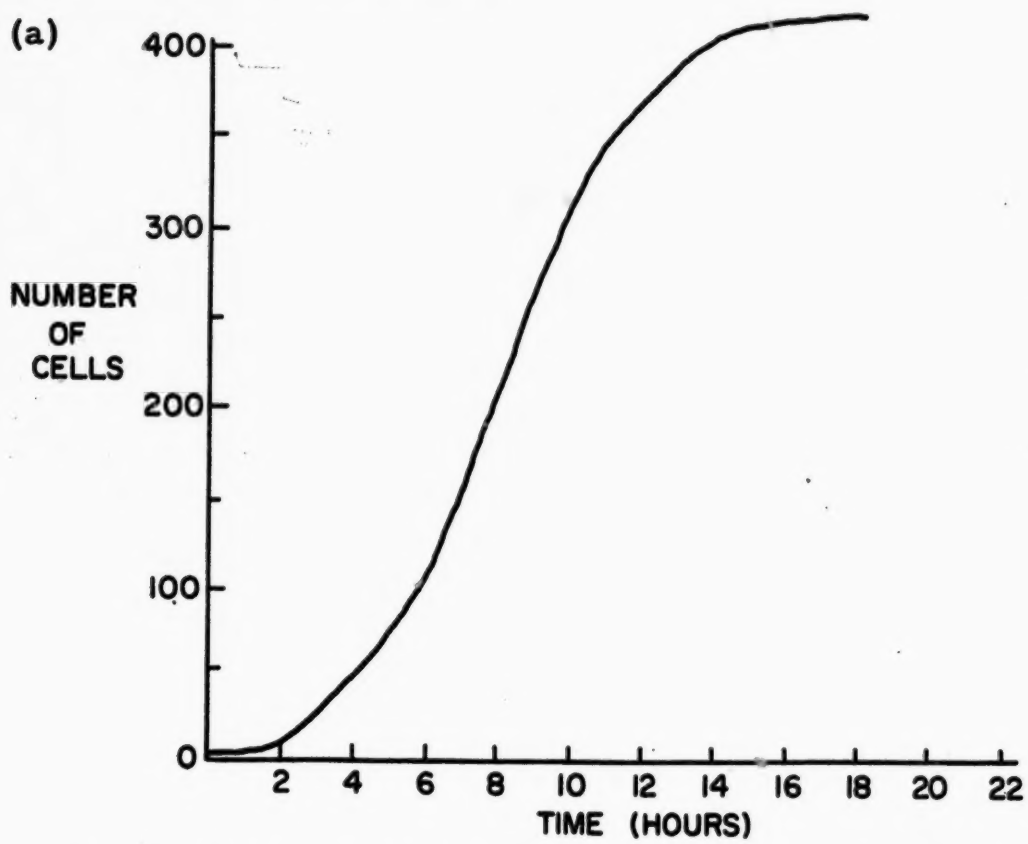

Population at 9 hours is about 300 cells. Linear interpolation of tabular data gives 288 cells.

Ans. (b) Apparently it levels off, so best guess is about 450 cells. As explained in problems, however, the population actually begins to drop, reaching a new plateau around 475 cells. Students have no way of knowing this from given data.

Ans. (c) Rate of growth is a maximum where slope of curve is the steepest. This is about at 8 hours. From tabulated data, greatest change is between 6 and 8 hours, 117 cells. Maximum rate of growth is thus 58 cells/hour, or about 1 per minute. The hour minimum rate of growth is found between 0 and 2 hours, and also between 16 and 18 hours. In each case it is a change of 4 cells, or 2 cells/hour.

B. Quiz and Discussion Questions

B-1.1 (B-1.1) "No model is ever complete". Would it be helpful if one could in fact construct a complete model? Explain briefly.

Ans. A "complete" model would have to be completely equivalent to the entity modeled, and so would lose allthe advantages ot a model.

B-1.2 (B-1.1) Discuss the differences between (a) functional and descriptive models; (b) dynamic and static models. Give an example of each.

Ans. A descriptive model is usually static: it does not change with the passage of time. A functional model is usually dynamic, and allows for the changes that occur as time goes by. The first two models in the chapter are descriptive, the population models are functional.

B-1.3 (B-1.1) Suggest two reasons why a mathematical model may be specially desirable.

Ans. Inexpensive, convenient for computation of predications (including "computerizing"), precise in showing relationships, often easy to refine, etc.

B-1.4 (B-1.1) When a model is first designed, what is the next step which should be taken with it?

Ans. Test it against reality.

B-1.5 (B-1.2) Figure B-2.2 shows the height-weight data for 17-year-old men as a somewhat scattered cloud of points. Explain why it is reasonable and useful to draw a particular straight line through these points.

Ans. The straight line offers a quick way to approximate the average weight for each given height (or vice versa), and also offers a quick way to represent the data with an algebraic equation as a model.

B-1.6 (B-1.2) The greatest height shown in Figure B-2.2 is about 7 feet. Would you be justified in using the graph to predict the weight of an All-State basketball center, 7'4" tall? Why or why not?

Ans. This is an extrapolation, but not very far beyond the measurements. Since the latter scatter anyway, it may not be unreasonable to make the prediction as suggested. But either a yes or a no answer should be acceptable if supported by good reasoning.

B-1.7 (B-1.3) Can the graphical model of airflow and pressures in the breathing apparatus of an animal (Figure B-2.10) be used when it is breathing out? If so, how? If not, why not?

Ans. Yes. Use the portion of the curve in the 3rd quadrant.

B-1.8 (B-1.4) The diaphragm control on a camera is often marked with the following numbers (called stops): 11, 8, 5, 6, 4, 2, 8. In going from any stop to the one with the next smaller number, the amount of light admitted to the film at a given shutter speed doubles.

(a) If the light admitted at stop 2.8 is called "L", how much light is admitted at stop 11, shutter speed remaining the same?

(b) If the proper exposure for certain conditions is 1/25 sec at stop 11, what would it be at each of the other stops?

(c) Do the answers to (b) form a linear or a non-linear relation?

Ans. (a) L/16.

(b) At stop 8: 1/50 sec; at 5.6: 1/100 sec; at 4: 1/200 sec; at 2.8: 1/400 sec.

(c) Non-linear. (since stop area x time = constant, this curve is a hyperbola.)

B-1.9 (B-1.4) Suppose you have a cube of wood, L units on a side. Now cut the cube into smaller cubes, each 1/2 L units on a side. Cut these in turn into cubes each 1/4 L units on a side, and so on.

(a) What is the total surface area of the original cube?

(b) What is the total surface area of the 8 cubes which result from the first cut?

(c) What is the total surface area of all the cubes resulting from the second cut?

(d) Is the increase in area linear or non-linear?

Ans. (a) $6\ L^2$

(b) $12\ L^2$

(c) $24\ L^2$

(d) Non-linear

B-1.10 (B-1.5) In the text, several factors which affect the growth rate of a town are listed: birth rate, death rate, nearness of other crowded towns, transportation system. Suggest 5 other factors which might influence the growth rate of a town. In each case, explain briefly why the factor would be likely to increase or to decrease the growth rate.

Ans. For example: Cost of real estate (if high, negative effect on growth rate).

Quality of schools (if high, positive effect).

Tax rate (high, negative).

Water supply (good, positive).

Sewer system (adequate, positive).

Well-paved roads (positive).

Good public library (positive).

Shops (if numerous and varied, positive).

Local industries (probably positive up to a point, but debatable).

Zoning law (if stringent, negative, perhaps; debatable).

B-1.11 (B-1.5) In the modified equation for the population growth model. $P = P_o[r - c(P - P_o]^n$, the world population would eventually reach a stable value of 9.67 billion. The constant, c, has a value of 3×10^{-12}. Suppose a further revision shows that c would better be 10^{-11}. What effect would this change have on (a) the stable value of the population, and (b) the year when it would be reached?

Ans. A larger value of c would cause the graph line of Figure B-1.16 to fall off more steeply. The stable population would be lower (about 5 billion) and would be reached in less time.

B-1.12 (B-1.6) We have seen that it is possible for one system to have a number of different models which apply to it. Many times an engineer finds it necessary to have models of subsystems. Suggest 3 models which could be used to describe a submarine.

Ans. Models of heat flow; controls; engines, etc.; periscope; etc.

C. SAMPLE TEST for Chapter B-1

B-5.1 Below you will find a model of adult male rabbit Trachea-Bronchial systems as measured and reported by Dr. Jones after studying 1000 normal, healthy male adult rabbits.

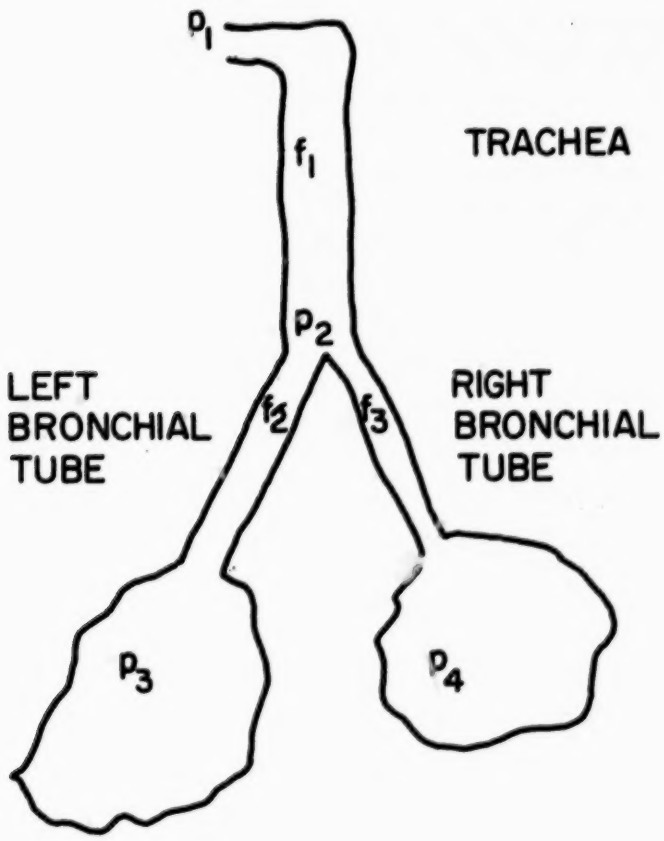

P_1 = pressure at mouth

P_2 = pressure at branch of bronchial tubes

$P_3 + P_4$ = pressure at left and right lungs

f = flow rate of air in respective tubes in FT^3/sec

$$f_1 = 2\,(P_1 - P_2)$$

$$f_2 = 1\,(P_2 - P_3)$$

$$f_3 = 0.5\,(P_2 - P_4)$$

$$f_1 = f_2 + f_3$$

Questions:

a. What is the plysical meaning of the coefficients 1.0 relative to 0.5 of the Left Bronchial tube vs. the Right Bronchial tube?

b. If $P_2 = P_4$ how much air will enter the right lung in one second?

c. If $P_2 = 2P_3$, is the left lung taking in air or exhaling air?

d. If $P_1 = 760$, $P_3 = 770$, $P_4 = 780$, find f_3 = _____.
f_1 = _____.

e. How would you modify this model to predict the breathing of a rabbit that had survived a disease that resulted in the complete collapse of the left lung? What would be the mathematical form of your new model?

f. Your colleague suggests that he is going to use this model to predict the behavior of the bronchial tubes in adolescent female rabbits. What advice would you give him?

5.2 Popville, Nebraska had a population of 10,000 people in the year 1966. A study of the population trend for Popville shows that the town has been losing people at a rate of 1% per year. Predict the town's population in 1968 if you assume no change in this rate.

5.3 A good balsa wood scaled-down model of the SST (super sonic transport) has many properties of the envisioned real aircraft. List five of the properties of the real aircraft that the balsa wood model cannot represent?

5.4 Below is a graphic model of the height-age growth function of girls at East High School:

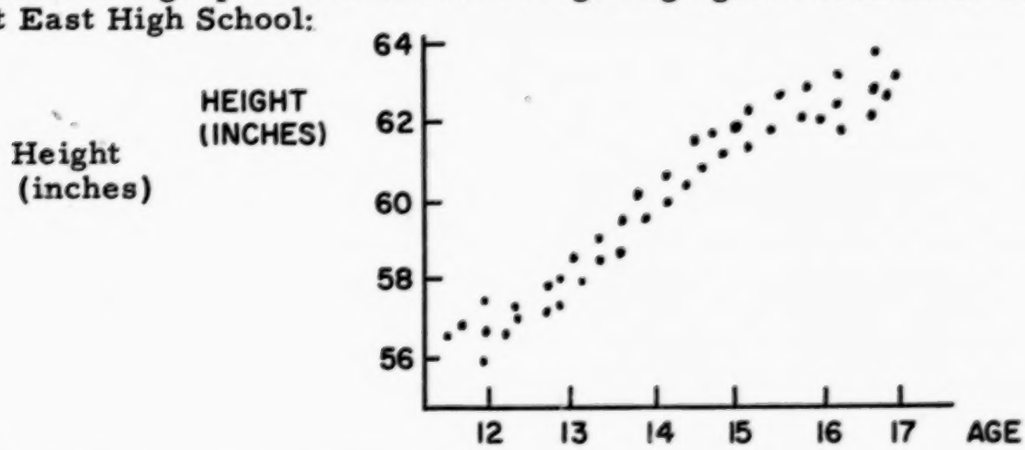

Questions:

a. What is the average growth in inches per year for this group of girls between ages 14 and 16?

b. Place a "curve" in the grid above that most accurately predicts the average for all the girls?

c. If Sue is 12 years old and is 56" tall, what statements can be justifiably drawn from this graph concerning her height when she is 17?

5.5 The Ford Motor Co. makes a clay-wood mock-up model of their "new" cars while they are in the planning stages. List as many good reasons you can think of for this modeling job.

VI Miscellaneous

A. Supplementary Ideas That Can Fit Into Text Exposition

1. In developing the idea of intergration under a curve (Fig. Bl. 13 pp. 18, 19 of 7/18/66 draft copy), one can show how the fineness of quantization of the histogram bars influences error. For instance if the bars are 25 years wide (instead of 10) the coarser steps which result will produce much larger departures from the fitted exponential curve. Conversely, as the intervals are made smaller, the number of steps increases and the maximum distance from any point on the staircase to the exponential curve gets smaller.

In the limit, of course, the departure goes to zero (i. e., if the population is counted continously there is no error).

2. The improved population model (Fig B. 16, 17, pp. 26, 27 of 7/18/66 draft copy) implies a negative feedback system and can serve as an introduction to later development of the concept. The corrective term acts to stabilize the svstem; its sign is always such that the system is forced to an equilibrium state. Owing to the "momentum" of the dynamic population, and to short-term uncertainties in the factors which control the system, there will be a noisy oscillation of small amplitude around the stable value of P (where R = O).

3. An example of progressive model evolution which shows how real-world measurements and improved theoretical models interact to provide a converging approach to reality is exemplified by the development of celestial mechanics. The sequence of models represented by the ideas of Ptolemy, Copernicus, Kepler, Newton, and Einstein illustrate the point.

4. Chemical models are illustrated by simple rate-dependent reactions like mixing or catalysis, or by much more complex systems such as the intricate molecular models for genetic structure (see DNA- and RNA- based models which have been widely discussed; e. g., Scientific American within last two years).

5. Some other examples of exponential functions are: electric light heating or cooling (the turnoff of an automobile headlamp is readily perceived as non-instantaneous), the f-stop of a camera lens (exposure doubles with each step), embryo cell division (there are about 40 doublings for a human), crystal growth, transmission through a series of optical or acoustic filters, radioactive decoy (C14 dating).

6. Suggested bibliographic references:

1. Beament, J. W. L. (ed.). Models and Analogues in Biology. (Symp. of Soc. for Exptl. Biol., No. 14), New York: Academic Press, 1960.

2. Clough G. C., Lemmings and population problems. Am. Scientist 53(2), 199-212, June, 1965.

3. Davis, K., Population. Sci. Am. 209 (3), 63-71, Sept. 1963.

4. Harmon, L. D., and E. R. Lewis. Neural modeling. Physiol Revs. 46(3), 513-591, 1966.

5. Hesse, Mary B. Models and Analogies in Science. New York: Skeed and Ward, 1963.

6. Rosenblueth, A., and N. Wiener. The role of models in science. Phil. Sci., 12: 316-321, 1945.

7. von Neumann, J. The Computer and the Brain, New Haven: Yale University Press, 1958.

8. Wynne-Edwards, V. C. Self-regulating systems in population of animals. Science 147, 1543-1548, 26 March, 1965.

9. Current issues of Popular Science and Scientific American have many good examples of modeling.

B. A-V Sources

The following films are descriptive of one phase or another of modeling. Films 1-9 are described in the list compiled by the Commission on Engineering Education "Motion Pictures for Engineering Education". They would be useful in either Chapter B-1 or B-2. Films numbered 3, 4, or 5 would be best used at the beginning of B-1

(1)	Approaching the Speed of Sound	75
(2)	Budget Size Bikini	9
(3)	Computer Studies of Fluid Dynamics	48
(4)	Design Augmented by Computer DAC-1	31
(5)	Flight Simulation	56
(6)	Flow Visualisation in Combustion Systems	29
(7)	Little Plover River Project	89
(8)	Problems at Port Washington	9
(9)	Speaking of Models	9
(10)	Firebird III (Modeling & building a new automobile) (General Motors Film Library)	

Chapter B-2

OPTIMIZATION

I. Approach

A. (WHAT?) This chapter presents three types of algorithms which are used in certain important classes of decision problems. These problems occur within the field of engineering called "operations research." For such types of problems, it is possible to determine the optimum choice (or design) or find improved solutions using a systematic and analytical (i.e. mathematical) approach to optimization.

B. (WHY?) Although most engineering design activity currently relies on "engineering judgment", this chapter is included in the text to show the student that certain classes of problems exist which can be solved in a strictly mathematical manner. Despite the fact that relatively simple examples from the real world are used for illustrations, the general methods developed for solving the problems may be modified and extended to more complicated optimization problems with the assistance of either an analog or a digital computer.

C. (HOW?) The first half of the chapter begins with a problem with only a few feasible designs possible, and ends with a problem for which a large number of feasible designs are possible. The simple inequality problem (often called a linear programming problem) in production planning is used as the basis for developing a technique which can be extended to a more complex problem in transportation planning. For both of these examples, the model of the system either is known or can be found.

The latter half of the chapter presents two types of problems (bakery and barber shop) which also require optimization, but in which the information available for making decisions is not precisely known in advance. In these two examples, the model is a probabilistic one. In either case, the models used are conceptually simple so that major emphasis is on the optimization portion of the problem.

D. (GOING WHERE?) Both this and the previous chapter are concerned with the general question of optimum decision-making. Chapter B-1 dealt with the four elements of decision-making (model, criteria, constraints, optimization), but this chapter concentrates on the aspect of optimization.

Because the models are relatively easy to understand, our attention is focussed on methods of solution. However, in succeeding chapters, it is shifted to understanding the concept of modeling. Throughout the remainder of part B, the ideas of optimization and modeling are extended to a much broader class of problems involving dynamic systems (i.e. those which change with time).

II. Outline

*1. <u>Introduction</u>

A. Decision-making is based upon either subjective criteria (e.g. "engineering judgment" or intuition plus previous experience) or

objective criteria (i.e., defined mathematically) or some combination thereof.

B. Certain classes of decision problems exist for which an optimum choice or design can be made. These are in areas where the criteria can be stated in mathematical form and appropriate algorithms have been developed.

*2. A Production Planning Problem (I)

A. A simple example of the "allocation of limited materials" type of problem is solved using the linear-programming algorithm in which:

(1) all variables of all the mathematical expressions are only raised to the 1st degree or power

(2) linear inequalities are used to determine the model and constraints.

(3) linear equations are used to express the criteria

(4) a graphical method (i.e. the act of optimizing) introduces a feasible region of solutions - this becomes progressively and more accurately defined, and is finally seen to contain the optimum solution as a point on the vertex of the boundary of this feasible region.

3. A Transportation Planning Problem

A. This is a type of "route-planning" problem.

B. Although this problem is more complicated than the previous ice-cream problem and more solutions are possible, a "best" solution is attainable because it is a linear-programming problem and the techniques developed in the previous section are still applicable and valid.

*4. Linear Programming Problems

A. Linear programming: meeting numerous conditions simultaneously to make an optimum solution accessible.

B. Linear programming problems are essentially optimization problems characterized by:

(1) a model and constraints consisting of a set of linear equations and inequalities

(2) a criteria function (to be maximized or minimized) which is also a linear combination of the variables.

(3) the optimum solution occurring on the boundary and not in the interior of the feasible region on a graph. This point is usually at a vertex of the polygon, where two of the inequalities are now treated as equalities.

C. Complex linear programming problems of the man-made world can be solved quickly and accurately with the aid of a computer. The methods developed for solving simple problems can be used to program computers to solve more realistic problems which may involve many, many variables.

(1) for example, the "simplex" algorithm has been developed which depends on the property of "vertex solutions" mentioned above in B (3).

5. Minimum Wire Length

A. This is a different, but simple, algorithm that enables one to find the optimum location of a telephone switching center. Some of its interesting features are the following:

(1) for minimum wire length, the actual lengths between buildings are not needed

(2) the only factor which determines minimum wire length is the number of telephones

(3) the "best" location is always at a building.

6. A Production Planning Program (II)

A. In this problem (bakery), the model is a probabilistic one - i.e. the system model is not known precisely but can be described only in terms of the probability that certain events will happen.

B. This type of model deals with the probability of expected results and even though we may not have a clear, complete, and concise idea where we'll end up, nevertheless such models are most useful and important in the real world.

7. Queueing Problems

A. This is another example of a group of problems involving probabilities which can be treated mathematically.

(1) queues (waiting lines) basically form because there is a probability of a large number of customers arriving at essentially the same time.

B. In general, queueing occurs when facilities are fewer than the demand for their use on some occasions, and greater than the demand for their use at other times.

(1) Usually, queueing theory tries to seek solutions to questions based on studies of the model rather than the actual system itself.

C. In order to consider the question: "What is the average queue length?", the following simplifying assumptions are necessary:

(1) random arrivals

(2) only 1 service facility

(3) servicing time is either constant or varies in a random fashion

(4) the utilization factor, β, must be < 1, which means the service facility can function properly and not break down.

D. The average queue length (q) may be expressed by either of two equations depending on whether the servicing time is constant or random.

E. Queueing theory is a potent tool because:

(1) its methods can be extended to more complex and interesting problems, and it can answer other questions about the system

(2) the results obtained may serve as a valuable guide to system design and optimization.

F. Since the success of many U.S. industrial organizations depends upon customer relations and on providing expeditious servicing of customer demands, basic models and optimization techniques of queueing theory have become of vital importance not only to engineering, but also to business management operations. For example, companies can plan for the expected use or demand of a given product or service to predict average and peak loads of the system.

*8. Concluding Comments

A. Be sure to read this summary - however, it is your optimum decision to make or not!

II. Objectives

A. To have the student acquire some degree of proficiency in both understanding and using the three types of algorithms presented in this chapter, as well as such terms as: linear programming, feasible region, etc.

B. To have the student realize that an optimum choice or decision may be made for certain kinds of problems which have the following characteristics:

(1) One can design a model by determining the design parameters (i.e. the number of the model)

(2) One can define both criteria and constraints objectively (i.e. expressed in mathematical form)

(3) One can develop an appropriate algorithm (i.e. a set of mathematical rules).

C. To have the student appreciate the power and beauty inherent in the techniques of decision-making, and that even though the text has developed systematic methods of solution for simple decision problems, nevertheless they can be extended to solve much more complicated problems in the real, man-made world in which we live. The principles are the same whether the decision is reached by a

highly complex computer or by means of a simple geometric interpretation (graph) of some algebraic expressions (equations and inequalities).

D. To have the student realize that the computer has made possible the treatment of complex problems (linear programming with a hundred or more variables), so that decision-making becomes more effective. Because more of the variables and limitations which actually exist can be included in the mathematical model, the solutions become more representative of the real world.

IV. Development

*1. Introduction

A. The treatment of this may vary - some teachers may prefer to let it go as a reading assignment only - others may try to develop the ideas via class discussion.

(1) Example to illustrate the ideas of subjectivity and objectivity entering into some common decision problems: What might a consumer consider as he contemplates buying: a car; air conditioner; a dress; food for the family; etc.?

B. Though perhaps not so much with this chapter as with some others, still you may find it helpful to orient the students by briefly discussing the outline and objectives before proceeding in depth.

C. Here are 3 suggested teaching schedules for this chapter:

(1) light: Sections 1, 2, 4, 8 (essential minimum)

(2) medium: Sections 1, 2, 4, 6, 8

(3) deep treatment: all Sections with least preference (if necessary to save some time) being given section 5.

[R # 1] D. The pamphlet "Mathematics in the Petroleum Industry" may prove useful and interesting for students to have and use during the remainder of this chapter (free in classroom quantities.)

*2. A Production Planning Problem

A. This is a very simple example of the linear programming algorithm. Although it can be done without the algorithm, it is being used to develop the algorithm - consequently, be sure the problem is well-understood by all.

B. The text example for this problem is so trivial that the students might not understand why they should wade through several pages of text in order to get the answer. An idea: before this section has been assigned for reading, you might assign problem # 1 to be done in class. After they have struggled with the problem for 10 minutes or so some will become discouraged. (Some will become discouraged after 30 seconds). Now is the time to assign the study of this section, with problem 1 as homework.

[T # B-2.2a] C. This transparency may be of some help to you in your discussion and explanation - you should note:

(1) the presentation does not coincide exactly with the text development, but has been simplified to avoid, we hope, the possible hazards on page B-2.4 of the text, which uses sign reversal in the inequalities and the word "stronger" when comparing inequalities.

(2) be sure the students see why point A is the optimum solution and not point B - hint: if one examines the criterion equation $P = 13000 - 3V$, the term $3V$ is to be a minimum (or V is small) if P is to be maximized.

(3) ask the students for an interpretation of point B (the minimum profit)

(4) we feel it will help if you try to work simultaneously with both the inequalities or equations and the graphical representation

(5) remember to stress the method by which the solution is developed - we're trying to show how a mathematical model is developed and then used to find an optimum solution; also, point out how the constraints and criterion tend to narrow down and define the feasible region and that the optimum point occurs on the boundary of the feasible region.

D. An alternate technique of solving the ice cream production problem is to use the amounts of vanilla (V) and chocolate (C) as variables. The feasible region is developed from inequalities involving V and C. The profit equation is then used to find the optimum amounts of V and C to produce. Transparency # B2.2b may be helpful in the use of this technique. Even though the above does not follow the textbook development of the problem, it is suggested because the linear programming problem in the next section is solved with this alternate technique.

[L # 10] E. Regarding the placement of lab experiment # 10 "Design of an Electric Heater" we can offer two suggestions:

(1) use as an introduction <u>before</u> this section is assigned or discussed, OR -

(2) this lab can fit at the end of either Section 3 or Section 4 to provide a change of pace in possibly long classroom "talk-sessions" on the text and H.W. problems.

[R # 6] F. I.B.M. has published a manual entitled: "An Introduction to Linear Programming", which may be helpful as background material and is also an excellent source of linear programming problems which can be used for testing purposes.

3. <u>A Transportation Planning Problem</u>

A. Take your pick (you know your own students best) whether you want to present this material first in class and then have students read the section later, or vice versa.

B. This problem is a good illustration of the essential elements of optimization problems that use a linear programming algorithm.

C. If you're a blackboard worker, have plenty of chalk on hand (colored should prove very helpful here) or else you might try using some transparencies. The overhead projector can be quite useful since you will want to refer to previous diagrams (not always feasible on the blackboard). You may want to:

(1) make your own using the diagrams in the text as a guide - have fun!

[R # 2] (2) purchase some commercial examples of linear programming - have money!

[T#B-2.3] (3) try our version - have luck!

D. In any event, whether you use a blackboard or projector, <u>interpret</u> as you go along - students should know what each expression means and the reasons for doing each step.

E. Here are some possible "trouble spots" in teaching this problem:

(1) the cost equation $C = 45960 - 30x - 10y$ (in dollars) may need to be clarified. If one solves for y, he gets: $y = -3x + (4596 - \frac{C}{10})$ The term in parentheses is the y - intercept. Hence, if we want C to be a minimum, then the whole expression will give a maximum value for y.

(2) Comparing the above equation for y to the general linear equation $y = mx + b$, we note that the slope $m = -3$. Plot this and then move a line (ruler) parallel to this line of slope = -3 across the feasible region. Ask the students to observe where, in this feasible region, we obtain the largest value of the y - intercept. This point represents the optimum solution and occurs on the boundary of the feasible region.

(3) Also, ask the students for an interpretation of the minimum value of the y - intercept (which is the costliest feasible solution).

(4) As a check on the minimum-cost solution, refer to table 4 in the text and verify both the horizontal and vertical sums.

*4. <u>Linear Programming Problems</u>

A. This section is a brief discussion of the scope and nature of linear programming. It basically summarizes the previous two sections as well as showing the role of the computer in linear programming.

[R # 4] B. Going further: the article "LP: A Grammar for Problem Solving" is a good general discussion on the widespread application of linear programming - there is an example of a farmer seeking the optimum feed blend for his cattle which you might be able to use with your students.

5. Minimum Wire Length

A. Although this is a different and interesting algorithm, this problem is probably the least important one in the chapter. We feel this is an optional section as indicated in the suggested teaching schedules.

B. This problem is simpler than the previous one and is quite straightforward. After the algorithm is developed, its solution should bring satisfaction to the slower students who might have had trouble with the previous section. It is an algorithm that is easy both to comprehend and use.

C. Going further: for some of the "eager-beaver" students who are intellectually curious and active, we have included in the resource section a problem which was used in a previous edition of the text along with an accompanying practice problem. It is "A More Complicated Minimum Wire Length Design Problem" and it is just that: complicated - so have fun with it!

6. A Production Planning Problem

A. This example of an optimization problem with a probabilistic model is meant as a "lead-up" to the queueing problem in the next section.

B. Warning - a subtle point which may need clarification is the distinction between the average profit per batch and the average total profit.

R (#7) C. A sample lesson plan for this section can be found in the resource section. It helps to give meaning to the data in the text.

7. Queueing Problems

A. This section is only an introduction to queueing theory and its purpose is to give a general indication of the type of results which can be realized.

B. Note: be careful to keep track of the simplifying assumptions as they are introduced - also, to clarify such terms and symbols as α, β, and the q equations to be used for either constant or random servicing time.

[D # 1]
[D # 3]
(1) if you need some extra information on the derivation of the q equations, we have listed two sources in the depth section which may be of some help to you.

C. Lab experiment # 11 on Queueing can best be done at the end of this section.

(1) Warning: as written, this may not be feasible and suitable - hence, you may have to modify the particular situation used in each school.

[R # 8] D. An idea: this is an illustration which you might use for an introduction to this section to develop the idea of average quque length.

of the model (especially if it is a probabilistic one) is always subject to question.

IV. Where a large number of feasible designs are possible, or many variables are involved in the problem, a systematic method of solving the problem is usually employed.

(1) Methods which are generally applied to certain groups of problems are known as algorithms.

(2) An algorithm is a systematic improvement method which can be described precisely.

(3) Algorithms with many variables (e.g. the simplex algorithm for linear programming problems) can be quickly and accurately processed with a computer.

[R # S] D. For further discussion: for a systematic approach to solving a sociological problem of our time (crime control), you might be interested in this different kind of optimization problem. It can be dovetailed in with the summary transparency (T # B-2.8) as an illustration of how a federally sponsored organization has conducted research into designing a crime control program which is similar to programs that are used to analyze the operations of military systems.

It occurred to Dr. J. Truxal as he was circling N.Y.C. waiting to land at the airport after a trip west to Boulder, Colorado. The details of this airplace stocking problem are found in part 7 - Resource Materials.

E. You might want to point out to your students that there are 3 disciplines of queues:

(1) 1st come, 1st served - e.g. upon entering some types of stores (butcher shop, the "deli", electronics parts, etc.) you get a ticket with a number on it and the clerks wait on the customers in numerical order

(2) random - e.g. when you may have to elbow your way through the crowd to buy the soda pop and hot dogs from the stand on the beach or at a football game

(3) priority - e.g. your car gets a flat tire going thru a tunnel and the traffic flow comes to a screeching halt - you'll get prompt attention all right, plus probably an accompanying bill!

[R # 9] F. For your general enlightenment, you'll find in the resource section some other information on the three major examples of queues as well as a summary of pertinent terms. Please note that the text only deals with the first example.

*8. Concluding Comments

A. It is short, but good, so read it - keep going - only 4 chapters left in Part B!

[T-#B-2.8] B. A transparency has been prepared which summarized in very general terms the two steps involved in problem solving.

C. The following is not included in the text, but we hope it may give you an overall summary of the first two chapters in part B:

I. Two reasons for making a model of a system are:

(1) to predict whether or not a design is feasible prior to construction or implementation

(2) to make improvements in an already existing system.

II. As we model we usually find it is not possible to effect all the improvements in design which seem desirable, but must choose (or optimize) among several alternatives.

(1) If improvement is carried to the point where no further improvement is possible, the design or plan is said to be optimized.

(2) Optimization is the process of achieving the "best" criteria while operating within the constraints set for the system.

III. In decision or design problems, improvement may be made by:

(1) "cut-and-try" procedures

(2) an analytical (mathematical) approach - even here, the validity

V. Answers to homework problems

2.1 Suppose that a radio manufacturer turns out only two types of radio: a standard model, selling at a profit of \$20 each, and a luxury model, selling at a profit of \$30 each. The factory has two assembly lines, but their capacity is limited. It is possible to produce at most either 8 standard radios or 5 luxury radios per day on one assembly line. The manufacturer is faced by another constraint: owing to limited skilled labor supply he has only 12 employees, so the available labor amounts to 12 man-days per day. To assemble a standard radio requires one man-day, but it takes two man-days to make a luxury radio.

(a) How many radios of each type should he produce in order to maximize his profit?

(b) What will this maximum profit be?

Ans.: Let r_s = number of standard radios produced per day

r_1 = number of luxury radios produced per day

$r_s \leq 8$

$r_1 \leq 5$

$$P = 20\, r_s + 30\, r_1$$

$$\therefore\ r_1 = -\frac{20}{30}\, r_s + \frac{P}{30}$$

$r_s + 2r_1 \leq 12$

$\therefore\ r_1 \leq -\frac{1}{2} r_s + 6$

For max. P we want max y intercept.

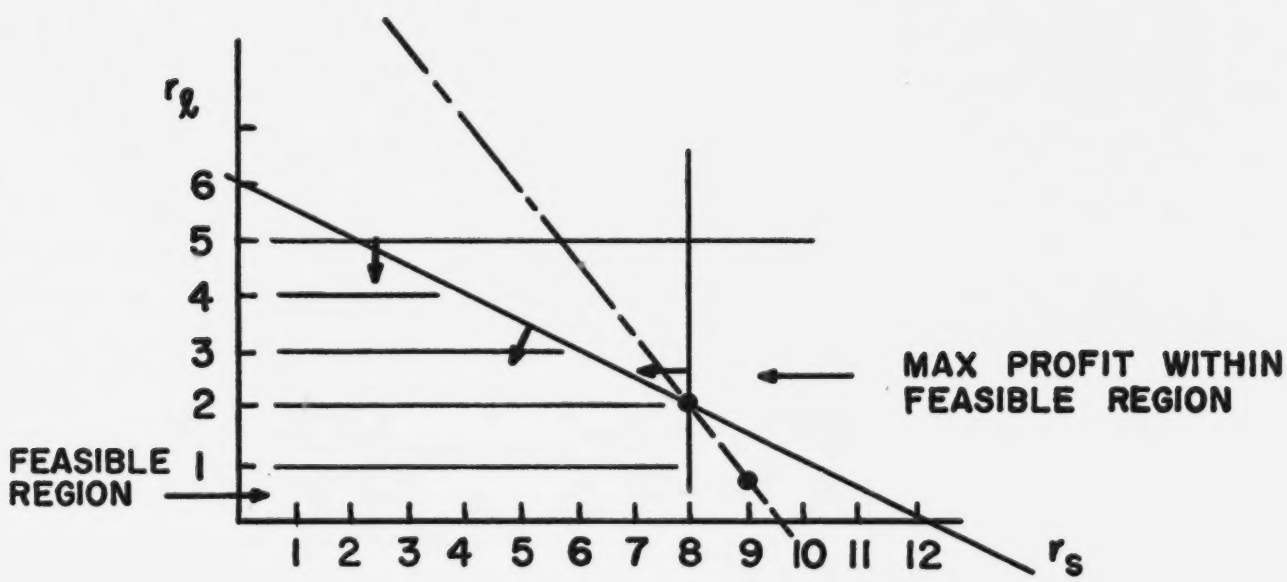

For max. profit make 8 r_s, 2 r_1

$\therefore\ P = 20\,(8) + 30\,(2) = 160 + (60) = \$220$

2.2 In the transportation problem of Section 3, suppose that the amount of wheat at Grand Forks is 30,000 bushels and at Chicago is 60,000 bushels. Find the minimum cost shipping plan.

Ans

	Denver	Miami	New York	
Grand Forks	42 x	55 y	60 30-x-y	30
Chicago	36 20-x	47 36-y	51 4+x+y	60
	20	36	34	

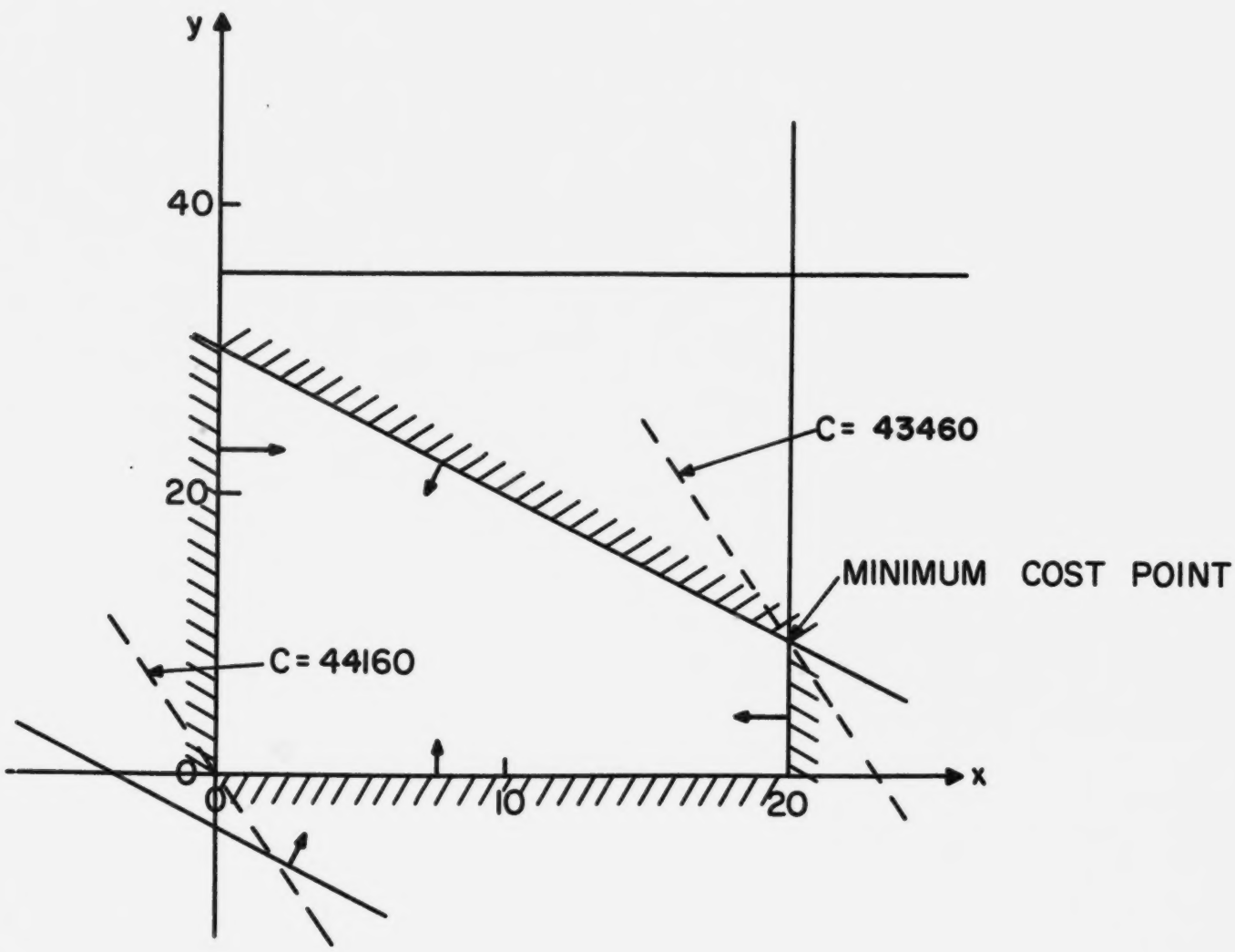

$$C = 10x[42x + 55y + 60(30 - x - y) + 36(20 - x) + 47(36 - y) + 51(4 + x + y)]$$
$$= 10[-3x - y + 4416]$$
$$= 44160 - 30x - 10y$$

Minimum cost at $\boxed{x = 20,\ y = 10}$ $C_{min} = \$43460$

	Den.	Mia.	N.Y.	
G.F.	20	10	0	30
Chi.	0	26	34	60
	20	36	34	

2.3 An oil company has 200 thousand barrels of oil stored in Kuwait (on the Persian Gulf), 150 thousand barrels stored in Galveston, Texas and 100 thousand barrels stored in Caracas, Venezuela. A customer in New York would like 250 thousand barrels and a customer in London would like the remaining 200 thousand barrels. The shipping costs in cents per barrel are shown below. Find the minimum cost shipment schedule.

	Kuwait	Galveston	Caracas
New York	38	10	18
London	34	22	25

	Kuwait	Galveston	Caracas
New York	0	150000	100000
London	200000	0	0

Total cost = $101,000.

Ans.:

	Kuwait	Galveston	Caracas	
New York	38 x	10 y	18 25 -x -y	25
London	34 20 - x	22 15-y	25 x +y -15	20
	20	15	10	

$$C = 10,000 \times [36x + 10y + 18(25 - x - y) + 34(20 - x) + (22)(15 - y) + 25(x + y - 15)]$$
$$= 10,000\,[11x - 5y + 1085]$$

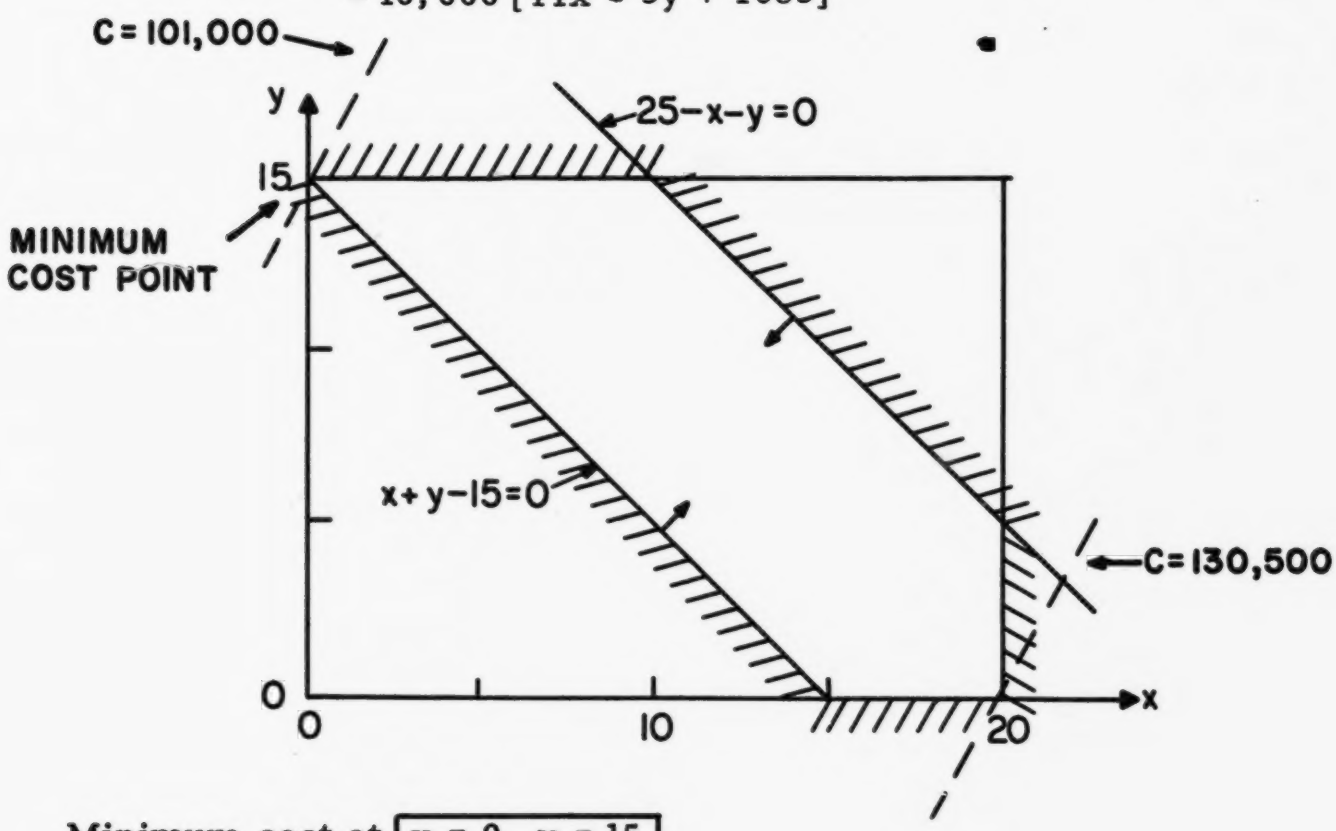

Minimum cost at $\boxed{x = 0,\ y = 15}$

$$C_{min} = 10,000 \times 1010 = 10,100,000¢ = \$101,000$$

	K	G	C
NY	0	15	10
L	20	0	0

2.4 a. Find the optimal location for the switching center when the number of telephones in each building (reading from left to right) is

8, 7, 8, 2, 2, 5, 4, 6, 7, 1.

b. Did you obtain all the optimal locations?

Ans.: a) At either building with 2 phones.

b) Yes - at <u>either</u> building with 2.

2.5 Consider the diagram on the right. Two rows of buildings are separated by a street. Find the optimal location for the switching center if there is the following constraint: a wire that goes across the street must be underground. (The expanse would limit the numbers of tunnels across the street to one).

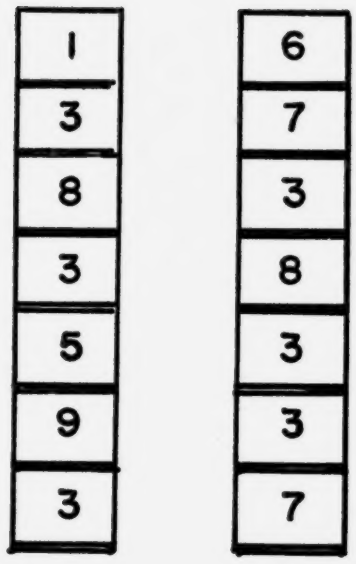

Ans.:

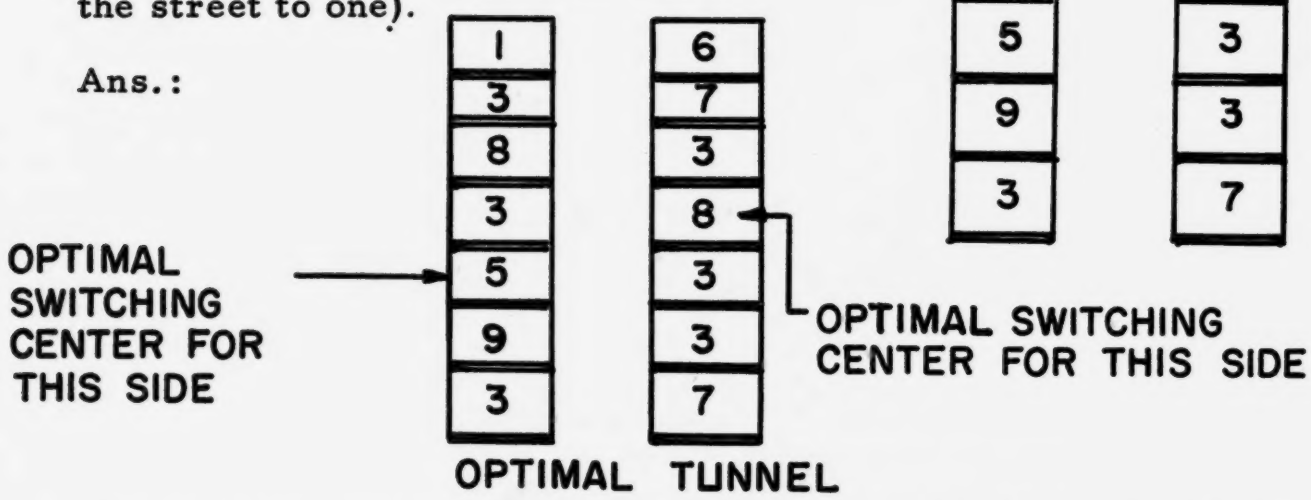

The solution involves finding the optimal center for each side separately (thus determining the point with minimum wire length to the tunnel). The position of the latter is chosen to minimize the number of wires through the tunnel.

2.6 (For Special Credit) The restriction in section 5 that the buildings must lie on a single road (note that the road need not be straight) can be relaxed. Suppose the buildings lie on a road network as illustrated below.

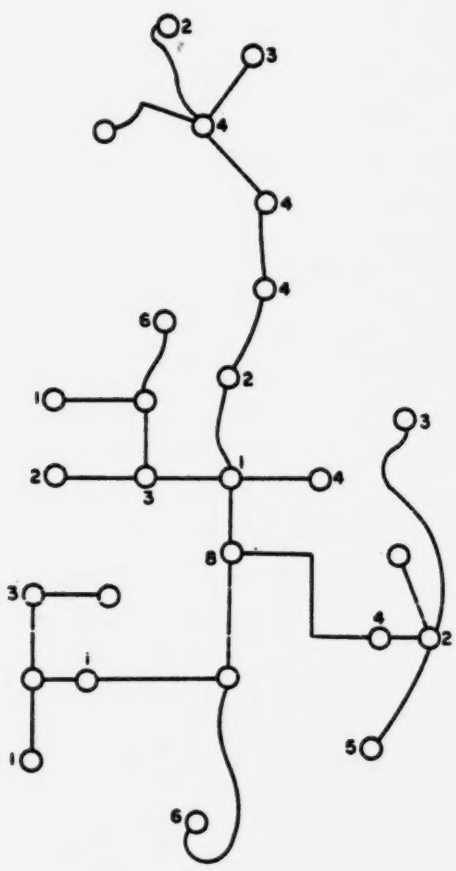

Each small circle is a building. Notice that there is exactly one path between any two buildings. A configuration with this property is called a tree. The community has many other roads but telephone lines can be laid only on the indicated roads because (a) of town laws, (b) of geographic obstructions, and (c) of economic factors. For a tree we know how to solve the problem of optimal location of a switching center.

a. For the single road town problem, the optimal location was characterized by two inequalities. What characterizes the optimal location for the tree town problem? You can obtain the correct inequalities by the same analysis used in the text.

b. Find the optimal switching center location for figure above.

c. Give an algorithm for making the necessary calculations in a systematic and efficient way.

Ans.:

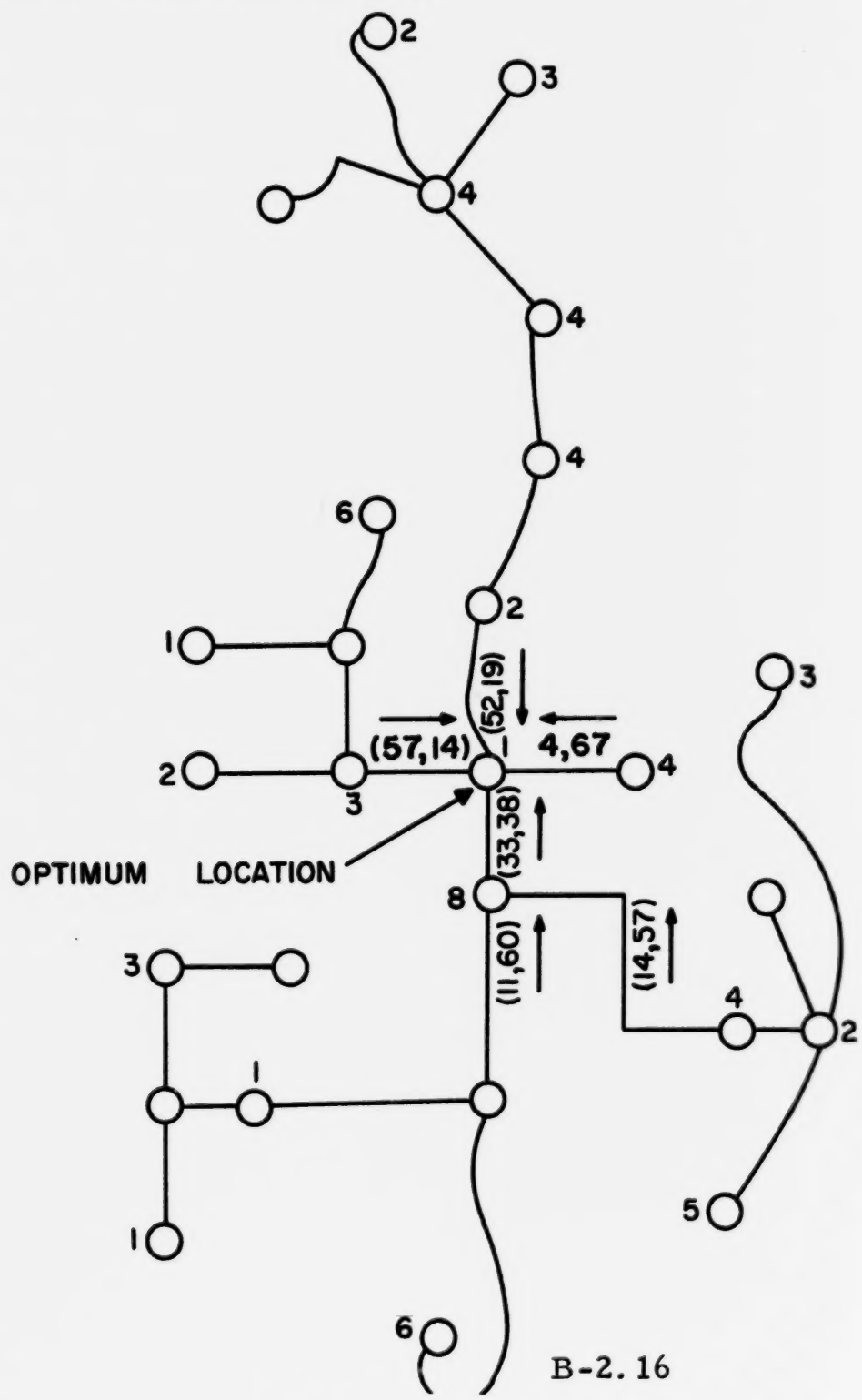

2.7 A newstand buys a certain weekly magazine for 20¢ and sells it for 35¢. Left-over magazines can be returned at the end of the week for a refund of 5¢. Their records show that they sell.

Only -50	magazines	5% of the time
51-55	"	10% of the time
56-60	"	20% of the time
61-65	"	30% of the time
66-70	"	15% of the time
71-75	"	12% of the time
76-80	"	8% of the time
		100

How many magazines (to the nearest five) should the newstand order to maximize the average weekly profit? What is the maximum average weekly profit?

Ans.:

No.	magazines	% of time the no. is sold	AVERAGE PROFIT (in cents/mag.) % SOLD (Prof.)-% NOT SOLD(LOSS)	
1.	50	100	15.0	
2.	51-55	95	13.5	
3.	56-60	85	10.5	
4.	61-65	65	4.5	OPTIMUM POINT
5.	66-70	35	-4.5	
6.	71-75	20	-8.0	
7.	76-80	8	-12.6	
	80 and above	0		

Total aver. profit = 50 (15) + 5 (13.5) + 5 (10.5) + 5 (4.5) = $8.92

2.8 In a barber shop the service time is 15 minutes per customer. The cost for a haircut is $2.00.

(a) If the average inter-arrival time is 20 minutes, find

The percent of time the barber will be working.

Answer 75%

(b) Assuming that we are talking about <u>constant</u> serving time, what is the average queue length? $\beta = 15/20 = .75$

Answer $q = .75\,(1-\frac{1}{2}(.75)/1-.75 =$ <u>1.87 customers</u> (neglecting tips)

re: Problem B-2.7

An Algorithm to Determine the Profit when Unsold Magazines are Returned for Credit

Let us assume that 55 magazines are received during one week. This quantity is sold 95% of the time. However, because of returns (5% of the time) the expected profit is reduced from (.95 x 15¢) to (.90 x 15¢).

In a similar manner, when 60 magazines are received, returns will be made 15% of the time. The loss incurred by the returns reduces the expected profit from (.85 x 15¢) to (.70 x 15¢). These values are shown in the extreme right hand column on page 17.

Note that in problem B-27 the anticipated profit of 15¢ per copy is just balanced by a possible loss of 15¢ if the item is not sold. How should the algorithm be modified so that it may be used with marketing problems in which the mark-up per item does not equal the loss resulting when unsold merchandise is returned for credit?

(c) What is the gross income/day assuming an 8-hour day?

Answer 3 customers/hr 24 customers/day
income/day = 2 (24) = $48

(d) In order to stay in business the barber must gross at least $40/day. If he wishes to keep his percent of working time constant and does not wish to speed up his service time, how much must business increase before he can afford to hire another man costing $20/day?

Solution (d) $20/day means 10 more customers per day.

The shop is 4 customers above the break even point, therefore if business increases by 6 more customers the barber can afford a new man.

(e) If he had not hired a new man when business increased by the amount in part (d), what would be the average queue length (still assuming constant service time)?

Solution $\beta = 15/16 = .94$

$$q = \frac{.94\,(1 - \frac{1}{2}(.94)}{1 - .94} = 8.3 \text{ customers}$$

2.9 In the previous problem we assumed constant service time.

(a) Use the same figures and calculate the queue lengths of (b) & (e) assuming random service time.

$\beta = .75 \qquad q = \frac{\beta}{1-\beta} = \frac{.75}{1-.75} = 3$ customers

$\beta = .94 \qquad q = \frac{.94}{.06} = 15.6$ customers

(b) Which is a more realistic model for serving time constant or random?

Answer Random serving time is more realistic because each customer requires a different amount of time for a haircut.

(c) How could the barber decrease his queue length without getting more help?

Answer By decreasing service time.

VI. Evaluation: Suggested quiz and test questions

Given the inequalities $3A + 2B \geq 2$, $A \leq 1$, $B \leq 1$, graph these inequalities on and B axes. I.e., indicate the portion of the A, B plane where these inequalities are all satisfied.

Ans.: 1.

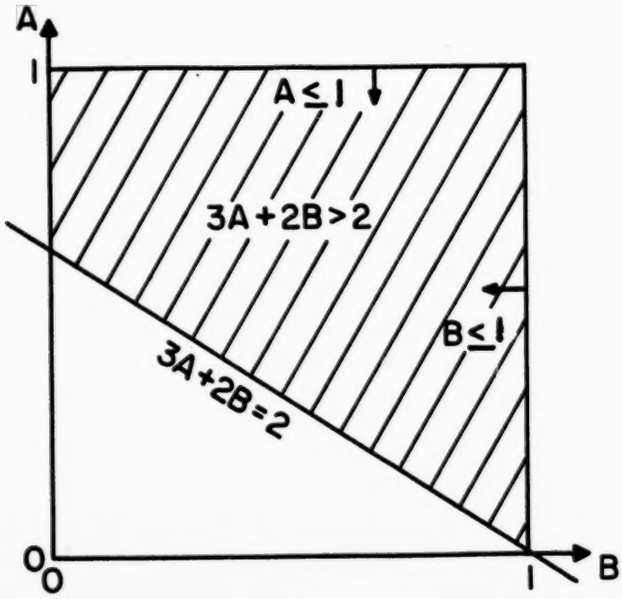

2. What is meant by the term "feasible region" in the solution of a linear programming problem by graphical means?

Ans.: The feasible region includes all the sets of values of the solution to the problem for which the restriction of the problem is met.

3.

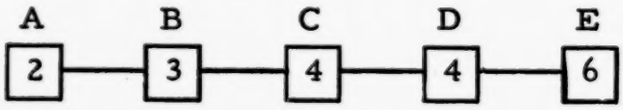

Five buildings are situated in a row as shown, where the number in each box gives the number of telephones in the building. Where should the switching center for the group be located?

Ans.:

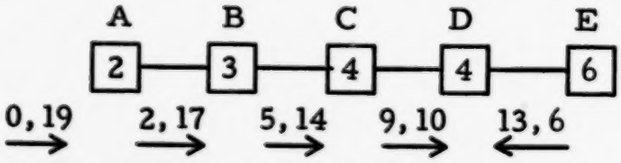

The proper center is in building D.

4. An advertiser wishes to sponsor a television comedy half hour and must decide on the composition of the show. Let x be the number of minutes of commercial time and let y be the number of minutes the comedian appears. Assume that the advertiser insists that there be at least three minutes of commercials, while the television network insists the commercial time be limited to at most fifteen minutes. Now the commercial time plus the comedian time must fill up the half hour.

a) What are the inequalities defining our problem?

$$x \geq 3$$
$$x \leq 15$$
$$y \geq 0$$
$$x + y = 30$$

b) Graph the equation and the inequalities and outline the feasible region.

Ans.:

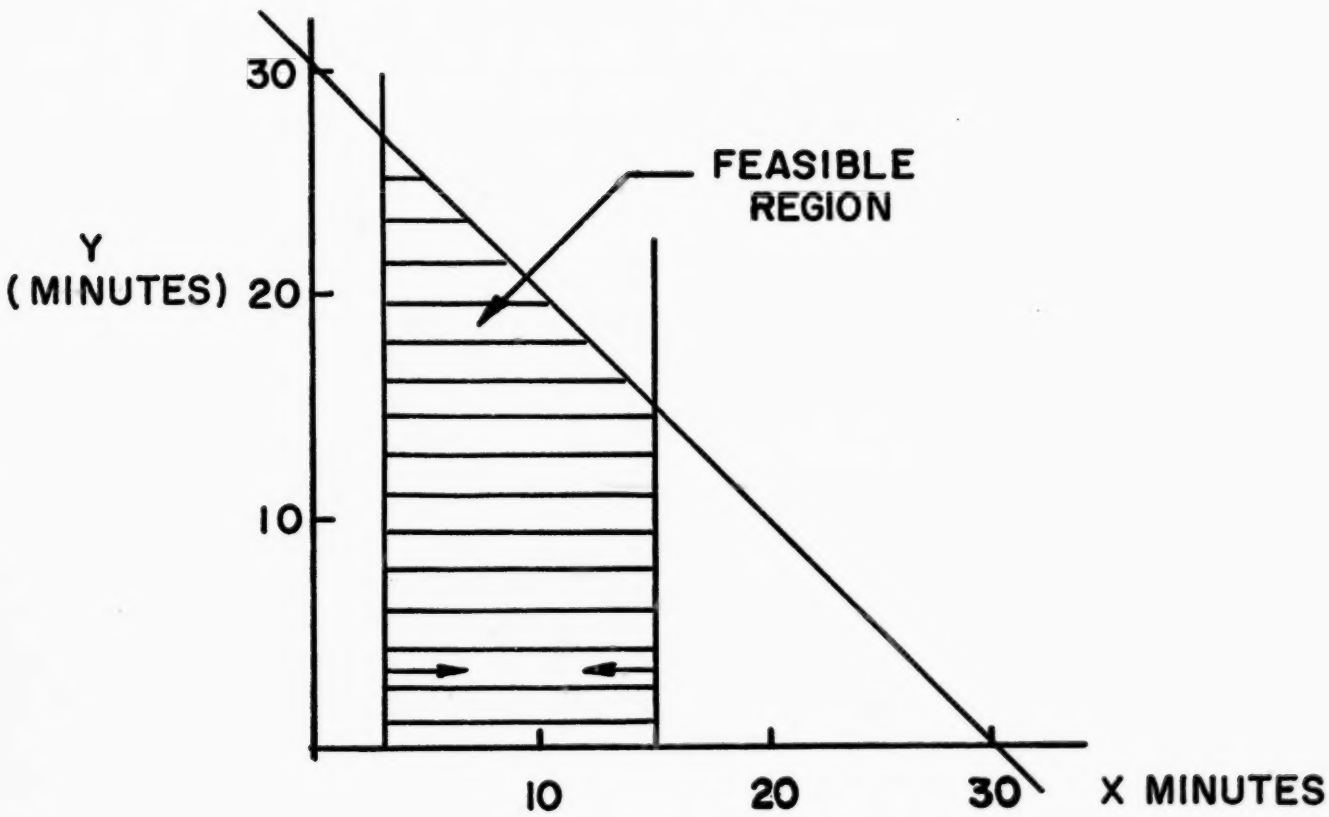

c) If the comedian costs $200 per minute and the commericals cost $50 per minute

(1) Write an equation to represent the cost.

(2) What is the minimum cost?

Ans.: $C = 50x + 200y = 50(15) + 200(15) = \$3750$

d) The advertiser wants to maximize the number of people who watch the program, and 70,000 more people will tune in for every minute that the comedian is on. Assuming the advertiser can spend as much as he has to, calculate the maximum number of prople that will watch the program.

$N = 70,000y = 70,000(27) = 1,890,000$

5. (May be used for class discussion as well as a quiz). An electrical wiring company has the following problem. They want to control two electrical devices (represented by light bulbs) by two switches independently from some distance away. The standard circuit for this problem is:

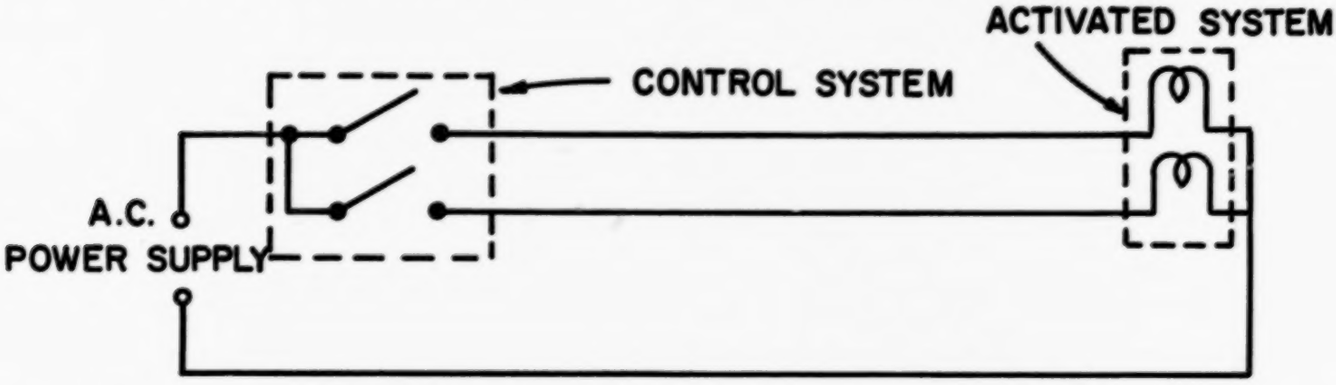

A bright young engineer in the company looks at the above circuit and offers his own circuit which reduces the number of connecting wires between the control system and operating system from 3 to 2. The following is the block diagram of his circuit.

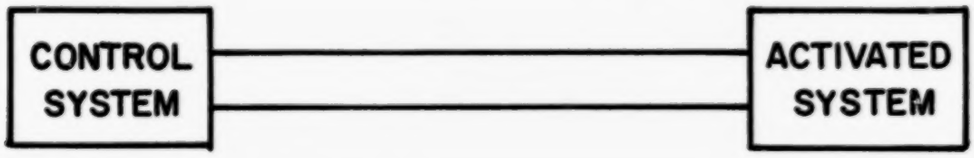

The young engineer is able to eliminate one connecting wire by the addition of four electrical elements called diodes.

The electrical wire company has an important decision to make when you consider that this circuit is used in thousands of system. Captain Optimization to the rescue. The first thing we have to do is gather data about the price of wires and diodes. For instance,

Wire costs 10 cents per foot
Diodes cost $1.50 each

One can readily see that adding diodes to the circuit is

(1) a waste of money if the distance is small
(2) a great saving if the distance is large

At what distance should the company switch circuits? (Solve the problem graphically)

Ans.:

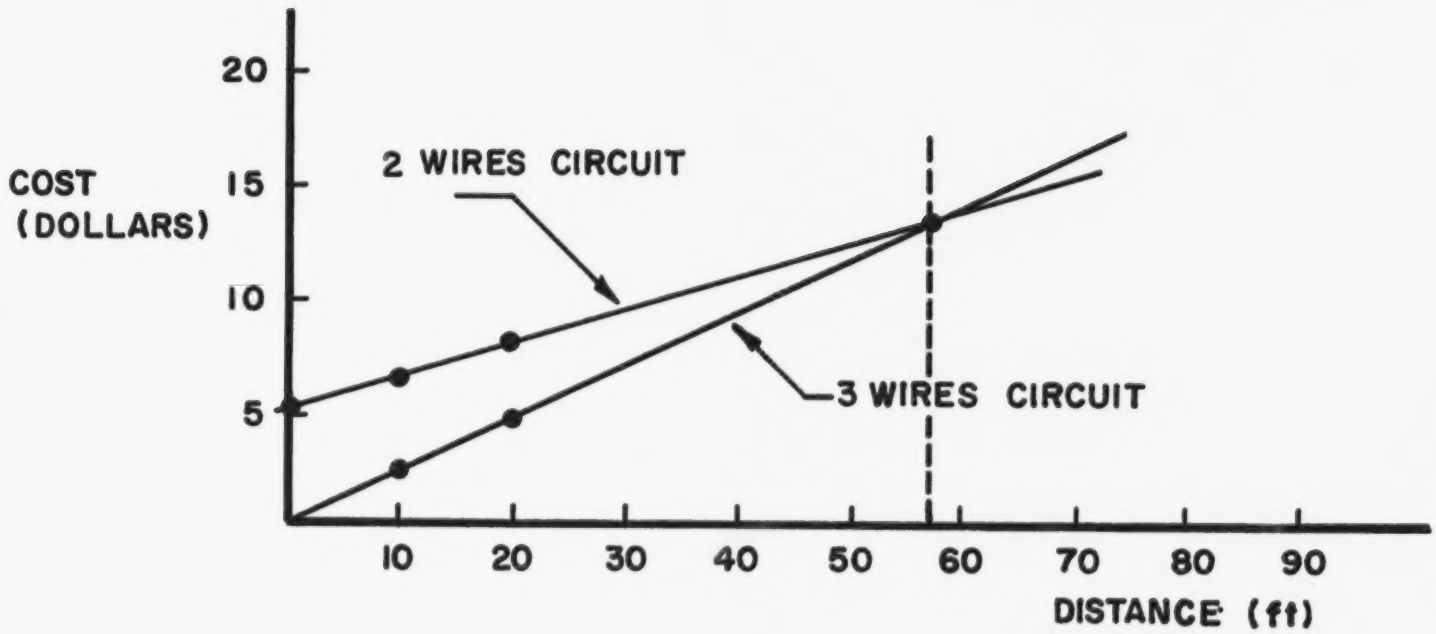

The company should switch circuits when the distance is about 57 feet.

Extra Credit

Figure out the actual circuit that the young engineer developed. (Hint - Four diodes were used; 2 in the control system and 2 in the activated system. A diode allows electricity to flow in only one direction. In your circuit use the symbol to represent a diode.

Ans.:

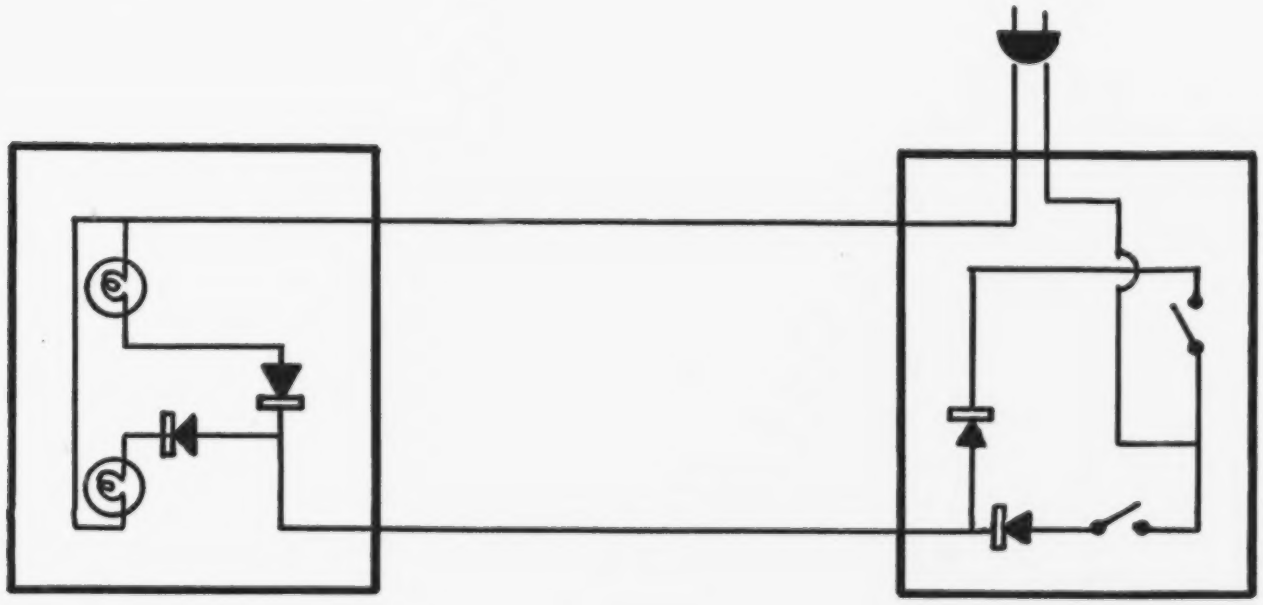

6. Questions can be obtained in IBM manual "Introduction to linear programming" mentioned in reference section (R # 6)
7. Quiz based on transparency on linear programming.

VII. Resource Material

1. Mathematics in the Petroleum Industry, a pamphlet obtainable from American Petroleum Institute, 1271 Ave. of the Americas, New York N. Y. 10020. Contains excellent linear programming problem, also sections on game theory and minimum distance problems.

2. LP: A Grammar for Problem Solving: Data Processor, Dec., 1966.

   Published by: Data Processing Division
   IBM Corporation
   112 E. Post Road
   White Plains, N. Y. 10601

   Deals with linear programming applied to management and engineering problems.

3. Crime Control: Task Force Urges Use of Science and Technology:

   Science, 23 June 1967, Page 1579 ff.

   A completely different kind of decision problem: the application of engineering concepts to the problem of crime control.

4. An Introduction to Linear Programming. Obtainable for IBM Branch Offices. Chapter 1 of this manual contains problems similar to those discussed in Chapter B-1, probably useful as a source of test questions. The rest of the manual will be useful for ambitious students.

5. Transparencies for Linear Programming discussion can be brought from:

   Creative Visuals
   Division of Cramco Industries, Inc.
   Box 310
   Big Spring, Texas

6. A More Complicated Minimum Wire Length Design Problem

This problem should be a challenge to even the better students. As a demonstration of what you are getting at, you might take off the back of one of the Logic Circuit Boards to show the printed circuit.

The system for calculating possibilities in Table 1 is indicated below. Some student will ask about (P-C)! when P is 10 and C is 10. Remind him that factorial zero (0)! is defined to be equal to 1. If he wants to know why answer him if you can, or refer him to his algebra teacher.

In the switching center problem we were able to devise an efficient algorithm for computation. In the following problem we are not so fortunate. We are compelled to resort to a strategy which may give a good solution and possibly a "best" solution.

A manufacturer is producing a device, for example, a small computer. The device is composed of components which are identical in size and shape The components are similar to 3 x 5 cards but with small electrical parts soldered or attached These components have terminals by which they can be electrically interconnected when they are inserted into a rack The terminals on each component

make contact with terminals at the back of the rack and the latter terminals are wired together according to the designer's plan.

This method of construction has many advantages. The division into individual components enables the designer to substitu e a number of small problems for one large problem Rapid repair can be accomplished by the removal and insertion of any component Manufacturing is more easily automated and the wiring of the rack can be performed by a machine Finally, minor modifications of design can be made even, after manufacturing has started.

A common problem that arises is one caused by electrical interactions between nearby pairs of wires at the back of the rack. These interactions produce malfunctioning of the device. The standard method used to avoid this difficulty is the arrangement of the components in the rack with a minimum wire length to the terminals on the rack. After such an optimal component placement has been determined minor modifications can be made to remove any remaining interaction which produces malfunctioning

This optimal component placement problem is very difficult. We idealize this problem to simplify the mathematical model. The solution of the simplified mathematical equation represents a good approximation of the optimal solution of the physical problem.

Let us suppose that our components are points in a plane, and that they can be placed at equally spaced positions (one-unit separations) on a line interval (our rack) as shown in Fig 1.

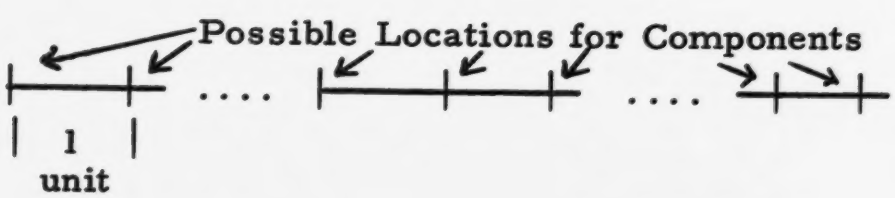

Fig 1 Possible component locations.

Furthermore, suppose that there are (c + 2) components (p + 2) positions on the rack ($p \geq c$), and that design considerations require that 2 of the components be at the ends of the rack for connecting the device to the outside world

A direct attack on the problem would require a trial of all possible placements of the c movable components in the p available positions * A few sample cases are listed in Table 1

*The number of such possibilities is obtained by picking c positions in all possible ways (the combination of p things c at a time = $p!/[c!\,(p-c)!]$ and, for each selection of c positions, placing the c components in all possible ways (=c!). Thus, there are $p!/(p-c)!$ possibilities. Here p! is used to represent p factorial, where 6!, for example, equals 6 x 5 x 4 x 3 x 2 x 1.

p	c	possibilities
10	10	3,628,800
10	5	30,240
5	3	60

Table 1 Sample possibilities for placing c components in p free locations.

An enumeration of all possibilities is clearly out of the question. Attempts to analyze the problem have not been fruitful. We must resort to a strategy (or intellignet guess) in order to formulate an algorithm which will give a reasonable solution.

One approach frequently used in such situations is called iteration. Iterative procedures begin with a guess at a solution. With some properly selected algorithm, we attempt to improve the guess; we then repeat the algorithm to improve the "improvement". The procedure is completed either when no further improvement can be made or when a decision is made that the solution is reasonably close to the desired result.

Let us consider a problem with 5 components designated A, B, C, D, and E, where A and E are to be at the ends of the rack. Table 2 lists each component and the required number of wires to every other component. Furthermore, in order to work with a specific problem, we assume there are seven rack positions (including the two at the end for components A and E), spaced at intervals of one foot.

NO. OF WIRE CONNECTIONS

To / From	COMPONENTS				
	A	B	C	D	E
A	0	1	2	1	0
B	1	0	3	2	1
C	2	3	0	1	2
D	1	2	1	0	2
E	0	1	2	2	0

Table 2 A listing of the number of wires between each pair of components (e.g., there are 3 wires between components B and C, etc.).

To apply the technique of iteration to this component placement problem, we must first make an initial placement. One possible initial placement is shown in Fig. 2.

A	B		C		D	E	Components
•	•	•	•	•	•	•	
1	2	3	4	5	6	7	Position

Fig. 2 Initial Placement of Components.

The length of wire needed for this placement is computed in Table 3, where the distance between components is the number in the center of each square and the number of wires between components is the number in the upper right-hand corner of each square.* Multiplying the two numbers in each square and then adding the results in each column gives the distances at the bottom. Adding the lengths in the bottom row gives the total length of wires required, which is 41 feet in this case.

From \ To	A	B	C	D	
B	1 [1]				
C	3 [2]	2 [3]			
D	5 [1]	4 [2]	2 [1]		
E	6 [0]	5 [1]	3 [2]	1 [2]	
	12	+ 19	+ 8	+ 2	= 41

Total Length of Wire

* No. of Wires

Distance Between Components (Feet)

Table 3 Length of wire required by initial placement.

This overall length of wire is not necessarily the shortest that is possible. To discover a better placement we need an improvement algorithm. It turns out that we can use the switching center algorithm developed in the text, Section 5. Suppose, for example, we wish to find the optimal location for component C when all other components are kept fixed. Think of C as a "switching center" with wires connecting it to "telephones" at each of the other components. The number of "telephones" at each component is the number of wires from C to that component (given in Table 2.).

Fig. 3 shows the switching center algorithm applied to finding the best location for component C. Let us study it with some care. If we placed component C into position 1,** there would be no appreciable wire length from A to C, but there would be 3 wire lengths from B, 1 wire length from D and 2 wire lengths from component E, a total of 6 wires. This can be checked from Table 2.

A shift of component C to the right from position 1 to position 2, will reduce the length of all wires to the right of position 1. Since the total number of these wires is 6, the overall reduction from this shift will be 6 lengths of the position interval. However, this shift to the right now adds 2 gap lengths from A to C. The increase of 2 gap lengths and the decrease of 6 gap lengths is shown in the top row in Fig. 3 by the numbers 2, 6; hence, movement to the right results in an overall decrease in wire length.

**We neglect here the fact that A is already in position 1; we are trying to find the optimum location for C without regard to position availability.

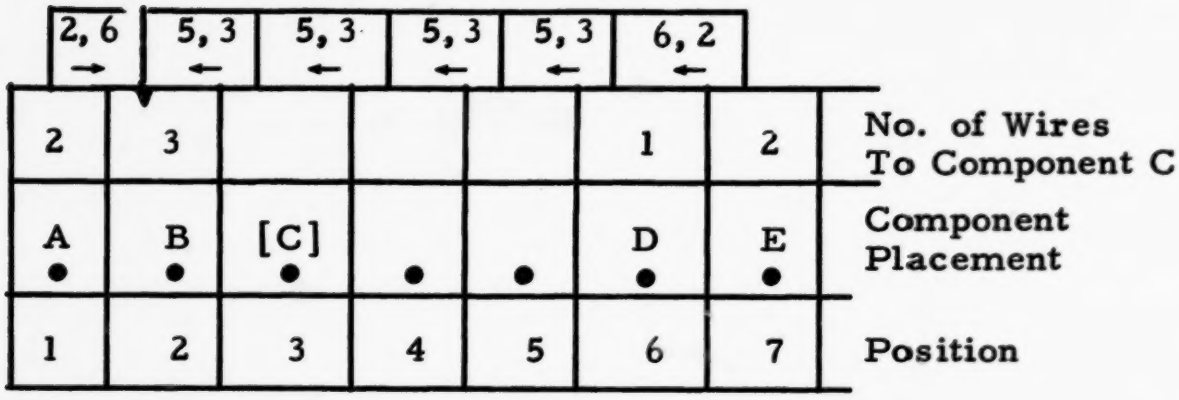

Fig. 3 Best location for C with A, B, D, E fixed.

If we now shift the position of component C from position 2 to position 3, each wire to the left of position 3 must be increased in length, so that 5 gap lengths of wire must be added to the total length of wire. However, all wires which are to the right of position 3 are decreased in length. Since there are 3 connecting wires to C which are to the left of position 3, this decrease is 3 gap lengths. The overall effect of this second shift will then be shown as 5, 3. If we are shifting to the right, then the first digit indicates the increase on the left, and the second digit indicates the decrease on the right.

It is thus apparent that the second shift -- to position 3 -- produces an increase in wire length. Out best placement for component C is therefore at position 2. But since position 2 is already occupied by component B, we can select position 3 as the second choice for placement.

Continuing the improvement algorithm, we next determine the best location for B, holding A, C, D, and E fixed. Fig. 4 shows our algorithm applied to this task.

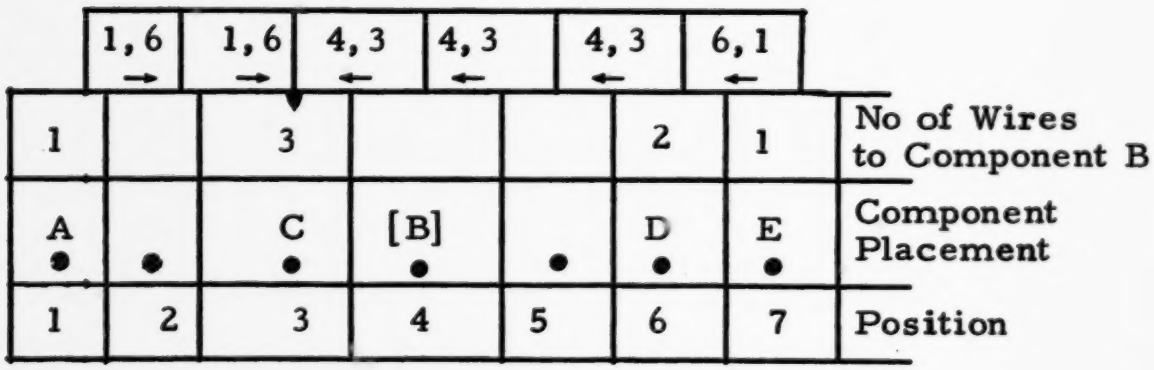

Fig. 4 Best location for B with A, C, D and E fixed.

The best location, from Fig. 4, is in position, but C is already there. Let us compare the number of lengths of wire when B is in location 2 to that when it is in location 4. We note first that we need concern ourselves only with the lengths of wire that connect the other components to B. The number of wire lengths connecting these components (A, C, D, E) to each other is not affected by the position of B.

When B is in location 2, there is one gap length to it from A, 3 lengths from C, (2) x (4) or 8 lengths from D, and 5 lengths from E for a total of 17 lengths. When B is is location 4, there are (1) x (3) lengths from A, (3) x (1) from C, (2) x (2) or 4 from D, and (3) x (1) from E, for a total of 13 lengths. Thus, it is better to place B in location 4.

Next, we apply the algorithm to locating component D with A, B, C, and E. held fixed. This is shown in Fig. 5. Again the best location is occupied by another

1,5 →		1,5 →	2,4 →	4,2 ←	4,2 ←	4,2 ←	
1		1	2			2	No. of Wires To Component D
A		C	B	[D]		E	Component Placement
1	2	3	4	5	6	7	Position

Fig. 5 Best location for D with A, B, D, E fixed.

component (B in this case). Since the position to the left of B is also occupied, obviously the position to the right is the best possible location.

If we apply the algorithm again to the location of C or B, we find no improvement possible,* so we are tempted to stop, feeling we have the best solution. Table 4 computes the wire length from 41 units (initial placement) to 33 units.

FROM \ TO	A	B	C	D	
B	3 [1]				
C	2 [2]	1 [3]			
D	4 [1]	1 [2]	2 [1]		
E	6 [0]	3 [1]	4 [2]	2 [2]	
	11	8	10	4	33

total length of wire

Table 4 Length of wire for placement of Fig. 5.

*In general, going through the components only once does not terminate the iterative process.

The placement of Fig. 5 is good but it is not the best. If C, B, and D are all shifted one position to the right, the wire length is reduced. It is interesting to note that we would have arrived at this (optimum) placement in <u>one step</u> from the initial placement of Fig. 2 if we had asked for the best location of B holding A, C, D and E fixed (try it!).

Example:

Apply the component placement technique to the situation in which the rack has 8 positions and there are 5 components with interconnections as given in the table below (similar to Table 2). Components C and D must be at the ends of the rack. Make a table like Table 3 to do your computations.

	A	B	C	D	E
A	x	2	2	3	2
B	2	x	1	0	3
C	2	1	x	2	0
D	3	0	2	x	2
E	2	3	0	2	x

Solution to Example:

Location	2		2		2	3	
	C	. . . .	B	(A)	E	D	
A				(4,5)		(9,3)	
Location	1			2	3	0	
	C	. . . .	(B)	A	E	D	
B			(1,5)	(3,3)		(6,0)	
Location	0		3	2		2	
	C	. . . .	B	A	(E)	D	
E			(3,4)	(5,2)			

	A	B	C	D	
B	1 [2]				
C	5 [2]	4 [1]			
D	2 [3]	- [0]	7 [2]		
E	1 [2]	2 [3]	- [0]	1 [2]	
	20	10	14	2	46

Interchange A and B

C . . . . A B E D

	A	B	C	D	
B	1 [2]				
C	4 [2]	5 [1]			
D	3 [3]	- [0]	7 [2]		
E	2 [2]	1 [3]	- [0]	1 [2]	
	23	8	14	2	47

Note, above is 1 <u>better</u>

R #9 7. A. <u>Examples of Queues:</u>

1.. cases of continuous service where there are a limited number of customers to be served at one time - these include:

(a) one server (i.e. "funnel" or "bottle-neck" situation) - e.g., a doctor's office

(b) parallel servicing (i.e. multi-server queues) - e.g., a department store.

2. cases of sporadic service where there are an unlimited number of customers to be served at one time - e.g. cars controlled by a stop light at an intersection.

3. cases where the number of items is limited by storage facilities and influenced by the probability of expected results (sales) - e.g. inventory problems, such as stocking a particular size and style of a pair of shoes.

B. <u>Terminology:</u>

These terms are applicable to the situation in which customers are satisfied with limited servicing facilities:

1. $\alpha = \dfrac{\text{number of arrivals}}{\text{unit of time}}$

2. $\dfrac{1}{\alpha}$ or $T\alpha$ = mean time between arrivals

these describe the probabilities of CUSTOMER arrival times

3. $\mu = \dfrac{\text{number serviced}}{\text{unit of time}}$

4. $\dfrac{1}{\mu}$ or $T\mu$ = mean service time or the time between operations

these describe the probabilities of SERVICE times

5. $\beta = \dfrac{1/\mu}{1/\alpha} = \dfrac{\alpha}{\mu}$ = utilization factor

Furthermore, the following conditions are assumed in our idealized treatment of queueing theory in the ECCP course:

(1) customers are serviced on a first come, first served basis

(2) there is a random arrival of the customers (note: this is not only a useful simplification, but it is also generally true in most ordinary real life situations)

(3) there is an infinite number of possible customers so as to avoid the prospect of any population depletion with time.

VIII. Material For Depth

A. References:

1. Henri Theil: Operations Research and Quantitative Economics, Mc Graw-Hill, 1965, Chapters 1 and 9.

2. John G. Kemeny: Introduction to Finite Mathematics, Prentice Hall, 1957, Chapter 6.

3. Drake, Alvin W.: Fundamentals of Applied Probability Theory, pp. 188-191, Mc Graw-Hill, 1967.

4. E. Ruiz-Pala, C Avila-Beloso, W.W. Hines: Waiting-Line Models, Reinhold, 1967. Supposedly a simple presentation of queueing theory which is still quite complex.

5. T. J. Fletcher, ed.: Some Lessons in Mathematics, A handbook on the teaching of 'Modern' Mathematics by members of the Association of Teachers of Mathematics, Cambridge University Press, (paperbook $2.95) 1965, Chap. 7, Linear Programming, pp. 208-222. Other subjects included which have some bearing on the ECCP course are: binary arithmetic and codes; flow charts; logic and problem algebra; matrices; graphs; etc. Book also mentions a binary adder and a LCB for the wolf, goat and cabbage problem.

Chapter B-3

MODELING

I. Approach

The intent of this chapter is to show how models are present in our consideration of the real world.

II. Outline

Section 1. The Nature of Models

A model is a simplified version of any real world image. Whether we construct it in our minds or really build it, we include only the essential ideas about which we wish to obtain more information.

Models may be verbal expressions, maps, graphs, or mathematical equations. In these forms, they may be used to describe a set of ideas and to evaluate and predict a system before it is built. Models may be tested, refined and improved at low cost.

Lab XIII
Film F-1 ("optional")

Section 2. The Graph as a Descriptive Model

Numerical data can be represented in a graphical form where the observer can determine, at a glance, the slope and y-intercept (if the graph is linear). From these observations, predictions can be made and mathematical equations can be found.

Lab XIII

Section 3. A Descriptive Model of Traffic Flow

A school corridor traffic problem is developed. Here, traffic is measured before, during and after the time when classes are being changed. A histogram is drawn, from which traffic patterns can be predicted and classes and room assignments can be made more efficiently.

Lab XIV
Film F-4 ("good")

Section 4. A Descriptive Model for Air Flow

A model of a respiratory system of an animal is developed. In this model, air flow through the trachea and bronchial tubes from the throat to the lungs and the accompanying air pressure are observed. From two measurements of pressure and one measurement of flow, a full mathematical analysis of flow rates can be made. From a few basic measurements on a system, can be obtained a simple mathematical model.

Transparency B-3.4

Section 5. Dynamic Models

The previous two sections illustrated models in which the relationships between factors do not change during the time interval involved in our observation of the behavior of the systems. When a change in time or in motion is used, we have a dynamic system.

Section 6. A Population Model

Based on the world population in 1960 of 3 billion and an increase of 2% per year, a model of world population is developed. The process of summing or integration is introduced and plots of the "population explosion" are drawn from these assumptions. The doubling of population every 35 years and plots of population until the year 2692 are also given.

Section 7. An Improved Population Model

The apparent exponential population growth of the previous section is compared to various biological and magnetic saturation models to show that the world population also has a limit. Many factors affect these ultimate growths and so is the world population affected by food supply, living space, war, birth control or any combination thereof.

Section 8. Uses of Population Models

Government on all levels uses population models to predict growth rate.

Film F-S ("optional")

Section 9. Model Application

Many models may be necessary for one system. For a car, the cooling system would require one model, the power plant requires another, the suspension system another, etc. However, the cooling system model of a car might model the cooling system of a house or refrigeration system. One model such as the cooling of a cup of coffee is exponential. A chain letter and the increase in head-size of an infant child are also exponential models.

Section 10. Model Equivalence

Models can be formed with symbols, or be constructed with computers or other mechanical, electrical or chemical systems. These systems can be equivalent as long as their behavior duplicates the behavior of the real system. The "black-box" idea where only the input and output are important is compact but simple. Mathematical models are generally used coupled with the speed and accuracy of computers. They permit rapid change of numerical factors to predict the outcome of many different versions of the model, and may act as the working model.

Film F-18 ("good")

Section 11. Summary

The primary object is to focus attention to the point of view that understanding in the Man-Made World comes through simplified versions of reality called "models" and the use of models to understand complicated situations.

III. Objectives

Students should clearly understand these ideas and concepts:

A. Models are universally used representatives of the real world.

B. Models may have many forms.

C. Models may be static or dynamic.

D. Models may be linear or non-linear.

E. Graphs are models and the area under a curve sometimes has a meaning.

F. One model may represent several systems and conversely, one system may require several models.

IV. Problems with Solutions and Answers

Relative difficulty of questions in B-3.

EASY	MODERATE	DIFFICULT
*4, 8	*1, *2, *6, *7	3, *5

*Key Problem to be Attempted by All Students

3-1 A more modern version of the six blind men and the elephant is suggested by the following problem. A printed capital letter of the English alphabet is scanned photoelectrically and the resultant signal is converted into digital form and read into a digital computer. Seven subroutines in the digital computer inspect it. The first states that the letter is like a U because it has at least one pocket to hold rain coming from above; the second shows that it is like a K because it has at least one pocket to hold rain from below; the third and fourth find that it is like an A because it has no pockets on the right or left; the fifth shows that it is like a V because it has two ends; the sixth shows that it is like an S because it has no junctions; the seventh shows that it is like a D because it has two corners. Combining these seven models of the letter, determine what it is.

Ans.: The only possibility is N.

3-2 Let us approximate a human body by a cylinder. Since the proportions of the body stay relatively constant as it grows, a tall cylinder will have a larger diameter than a short one. We shall assume that the height of the cylinder is always 7 times the diameter. Thus, the cylindrical approximation of a 6-foot man will have a diameter of 6/7 foot and a volume of $\pi r^2 h$, or about 3.5 cubic feet. The human body is about 60% water and weighs about the same as an equal volume of water would. Water weighs 62.4 pounds per cubic foot so the 6-foot equivalent will weigh about 216 pounds.

(a) Compute the weights for equivalent cylinders whose heights are 2, 3, 4, and 5 feet. Plot the results, including 6 feet, on a graph showing height versus weight.

(b) What kind of curve is this? How does it compare to that of the straight-line-average fit of Fig. 3? Discuss any discrepancies and the validity of the earlier model in light of the new one.

Ans.:

(a) Weight = $(\pi r^2 h)(62.4)$

Height (ft.)	Diameter (ft.)	Weight (lbs)
2	2/7	8
3	3/7	27
4	4/7	64
5	5/7	125
6	6/7	216

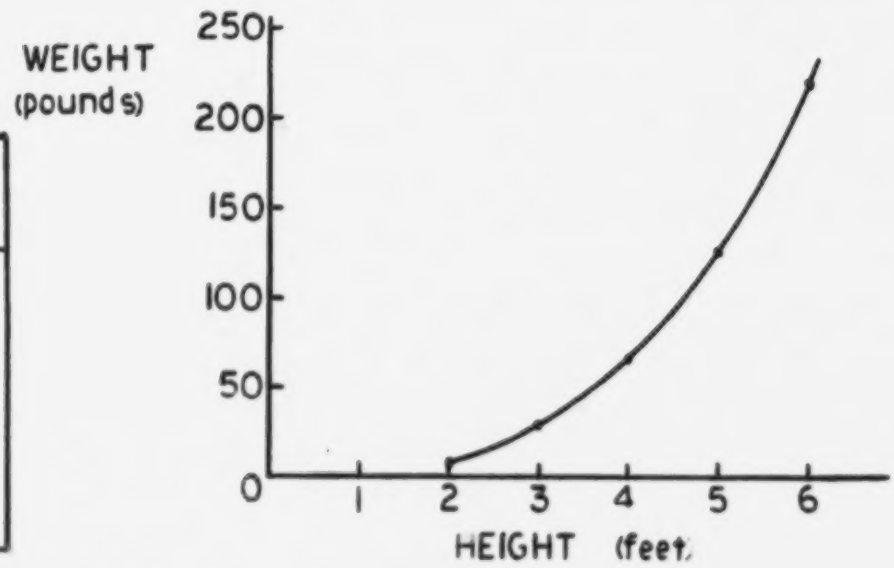

Note to teachers: It is easily shown that the weight of an object vaires as the cube of the scaling factor of its dimensions. In this problem doubling each dimension results in a multiplication of the weight by 2^3 or 8. Tripling each dimension produces a multiplication of its weight by 3^3 or 27 etc. The analysis is as follows:

$$W = (\pi r^2 h)(62.4)$$

Since the diameter is 1/7 of the height, $r = \frac{h}{14}$

$$W = (\pi)\left(\frac{h}{14}\right)^2 (h)(62.4)$$

$$= \left(\frac{62.4}{196}\right)(\pi)(h^3);$$ but $\left(\frac{62.4}{196}\right)\pi$ can be set equal to k, thus

$$= kh^3$$

(b) Since weight is proportional to volume, the curve is cubic.

The earlier model (Section 2) was adequate as a linear approximation because only a small part of this curve was represented; the portion from 5 feet to 6 feet is close enough to linear that such a straight line fit is not too far off. This also illustrates the error pointed out in the text where unwarranted extrapolation led to meaningless results. Here a reasonably accurate theoretical model shows how real-world measurements could be expected to turn out for earlier portions of the height-weight curve.

3-3 A paint brush has just been used and the owner wishes to clean it. After the brush has been scraped against the side of the paint can, it still contains 4 fluid ounces of paint. The owner dips it into a quart (32 fluid oz.) of clean

solvent and stirs well until the diluted paint solution is uniform. After draining, the brush still holds 4 fluid ounces, part of which is paint and part solvent, since the diluted solution is uniform. The process is repeated with a fresh quart of solvent.

(a) How much paint is left in the brush after 5 solvent baths?

(b) Prepare a table and plot a curve of the amount of paint remaining after each rinse. What kind of curve is this? Will the paint brush ever get completely clean? Why?

Ans.:

(a) After one rinse the entire uniform solution is comprised of 4 ounces of paint and 32 ounces of solvent. The fraction of paint in the mixture is then:

$$\frac{4}{4+32} = \frac{4}{36} = \frac{1}{9}$$

After draining, the brush now contains:

$$(4)\ (\frac{1}{9}) = \frac{4}{9} = 0.45 \text{ ounce of paint}$$

With the second dilution, the fraction of paint in the new mixture is:

$$\frac{4/9}{4+32} = \frac{4/9}{36} = \frac{1}{81} \text{ or } \frac{1}{9^2}$$

and the amount of paint in the brush after draining is:

$$(4)\ (\frac{1}{9^2}) = \frac{4}{81} = 0.049 \text{ ounce}$$

Continuing this process, it is evident that after the fifth rinse the brush will contain:

$$(4)\ (\frac{1}{9^5}) = \frac{4}{59049} = 6.8 \times 10^{-5} \text{ ounce}$$

(b)

Rinse Number	Paint in Brush Before Rinse (oz.)	Fraction of Paint in Mixture	Paint in Brush After Rinse (oz.)
1	4	$\frac{4}{36}$	$\frac{1}{9} = 0.11$
2	$\frac{4}{9}$	$\frac{4/9}{36}$	$\frac{1}{9^2} = 0.012$
3	$\frac{4}{9^2}$	$\frac{4/9^2}{36}$	$\frac{1}{9^3} = 0.0013$
4	$\frac{4}{9^3}$	$\frac{4/9^3}{36}$	$\frac{1}{9^4} = 1.5 \times 10^{-4}$
5	$\frac{4}{9^4}$	$\frac{4/9^4}{36}$	$\frac{1}{9^5} = 1.7 \times 10^{-5}$

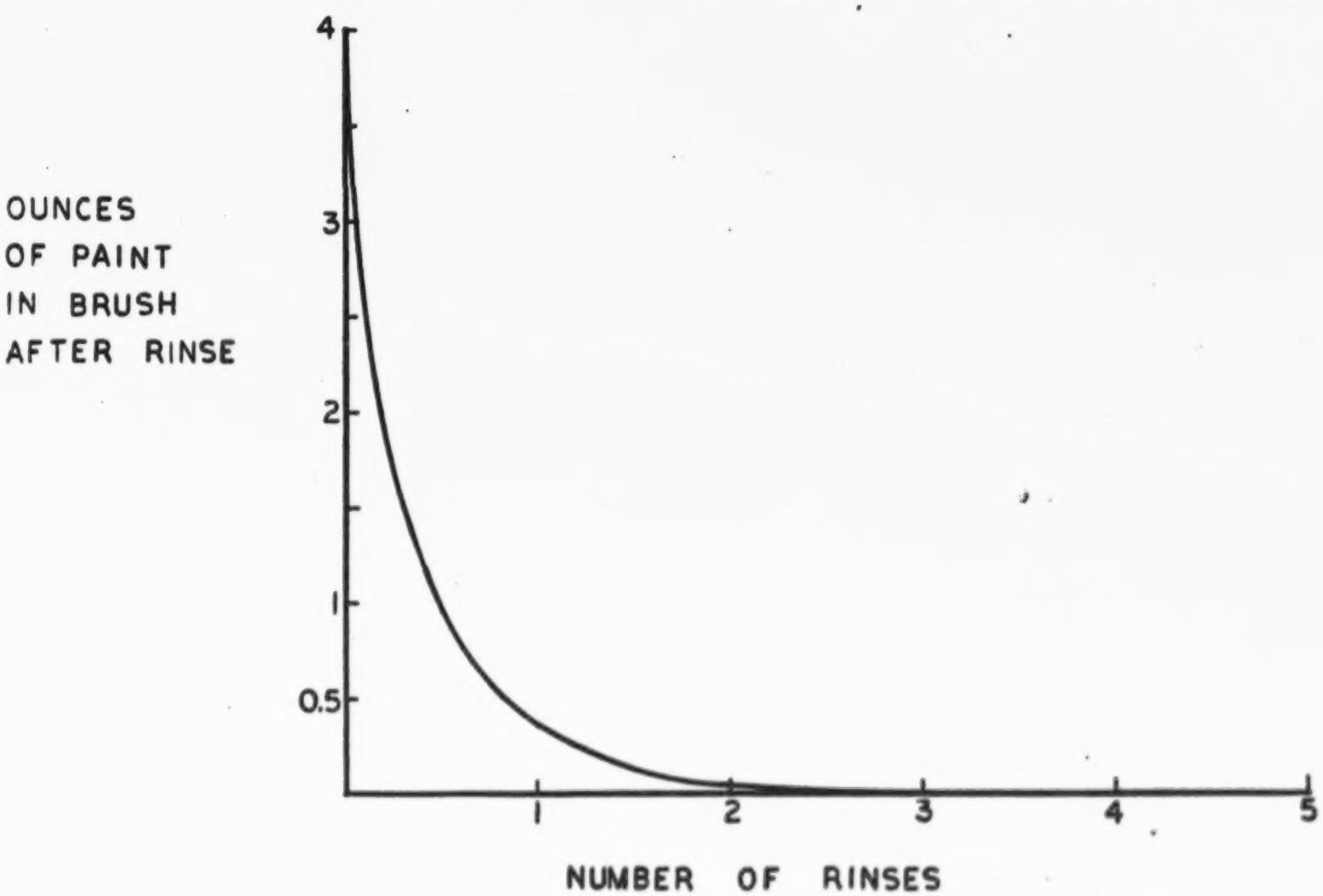

The curve is exponential.

(b)

Rinse Number	Paint in Brush Before Rinse (oz.)	Fraction of Paint in Mixture	Paint in Brush After Rinse (oz.)
1	4	$\frac{4}{36}$	$\frac{1}{9} = 0.11$
2	$\frac{4}{9}$	$\frac{4/9}{36}$	$\frac{1}{9^2} = 0.012$
3	$\frac{4}{9^2}$	$\frac{4/9^2}{36}$	$\frac{1}{9^3} = 0.0013$
4	$\frac{4}{9^3}$	$\frac{4/9^3}{36}$	$\frac{1}{9^4} = 1.5 \times 10^{-4}$
5	$\frac{4}{9^4}$	$\frac{4/9^4}{36}$	$\frac{1}{9^5} = 1.7 \times 10^{-5}$

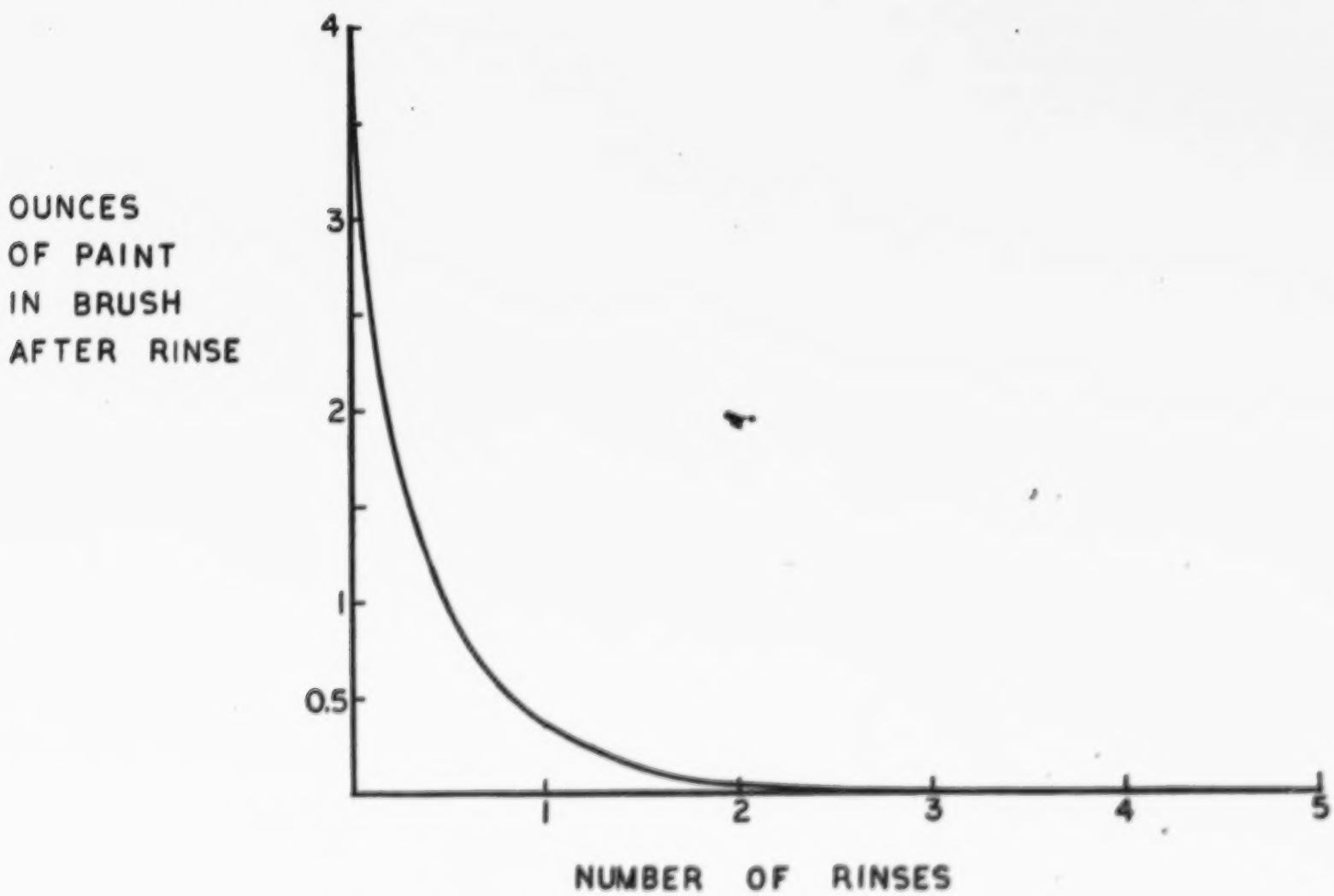

The curve is exponential.

3-5 You are served a hot cup of coffee at 200°F and a cold container of cream at 40°F, and you do not intend to drink the coffee for 10 minutes. You wish it to be as hot as possible at that time. Assume that the coffee cools as shown in Fig. 20(a) and that the cream container stays at the same temperature.

(a) Determine from the graph the temperature of the coffee at t = 5 and t = 10 minutes.

(b) If a volume V_1 of coffee at temperature T_1 is mixed with a volume V_2 of cream at temperature T_2, assume that the temperature of the mixture is:

$$\frac{T_1V_1 + T_2V_2}{V_1 + V_2}$$

What would the temperature of the mixture be if 1 fluid ounce of cream is added to 6 fluid ounces of coffee at t = 10 minutes?

(c) Now assume that the cream is mixed with the coffee at t = 0. What is the temperature T_o of the mixture at that time?

(d) The cooling curve of the mixture is similar to that of Fig. 20(a), except that it begins at the new temperature T_o as calculated in part (c) above and it always lies $\frac{T_o - 75}{200-75}$ of the distance from the straight line showing room temperature (75°) to the given curve. What will be the temperature of this mixture at t = 10 minutes?

(e) Will a hotter cup of coffee result from adding the cream first or later?

Ans.:

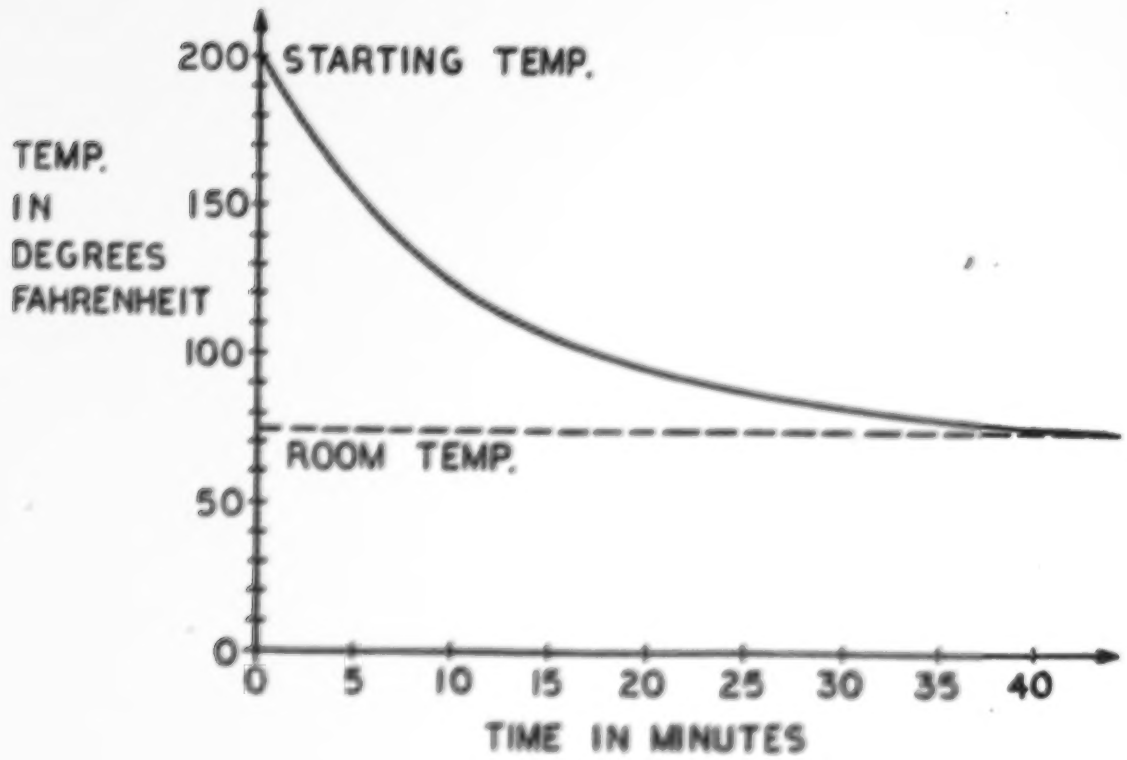

(a) From the graph, at t = 5 minutes the temperature is about 155°F; at t = 10 minutes the temperature is about 125°F.

(b) $T = \frac{(40)(1) + (125)(6)}{1 + 6} = \frac{790}{7} = 113^{\circ}F$

(c) $T_o = \frac{(40)(1) + (200)(6)}{1 + 6} = \frac{1240}{7} = 177^{\circ}F$

(d) $\frac{T_o - 75}{200-75} = \frac{177-75}{200-75} = \frac{102}{125} = 0.815$

At t = 10 minutes $T = 75 + (0.815)(125-75) = 75 + 41 = 116^{\circ}F$

(e) Since the answer to (d) is greater than the one for (b), it would be better to add the cream first.

Comment - There has been considerable discussion concerning this problem. Its use here is to illustrate modeling. The problem involves many complex variables. The validity of the model may be challenged, thus stimulating discussions and suggesting experiment.

3-6 The half-life of radioactive decay is the time in which the amount of the given radioactive material decreases by a factor of two. Radioactive carbon-14 has a half-life of 5700 years, but let us assume that it is 5000 years in this problem to allow simpler calculations. Carbon-14 is created by the action of cosmic rays on the carbon dioxide in the atmosphere, and the amount remains constant with time. Growing plants, and the animals that eat the plants, absorb carbon-14 during their lives, but the process stops when the plant or animal dies. Radioactive decay then causes the relative amount of carbon-14 to decrease. Measurement of the radioactivity of fossils permits an estimate to be made of the time at which they died.

(a) What fraction of carbon-14 will remain in a sample after 50,000 years?

(b) Approximately how old is a fossil bone in which the amount of carbon-14 is 1.0% of its initial value?

(c) Sketch a curve showing the fraction of carbon-14 left in a sample as a function of time.

Ans.:

(a) $\frac{50,000}{5000} = 10$ half-lives

$(\frac{1}{2})^{10} = \frac{1}{1024}$ of original carbon-14 remaining

(b) $(\frac{1}{2})^N = 1.0\% = 0.01$

$2^{-N} = 0.01$

$2^N = \frac{1}{0.01} = 10^2$

$N \log 2 = 2$

$N = \frac{2}{\log 2} = \frac{2}{0.30} = 6.7$ half-lives

$(6.7)(5000) = 33,500$ years

(c)

No. half-	No. Years	Fraction of carbon-14 remaining
0	0	1
1	5,000	0.5
2	10,000	0.25
3	15,000	0.13
4	20,000	0.063
5	25,000	0.031

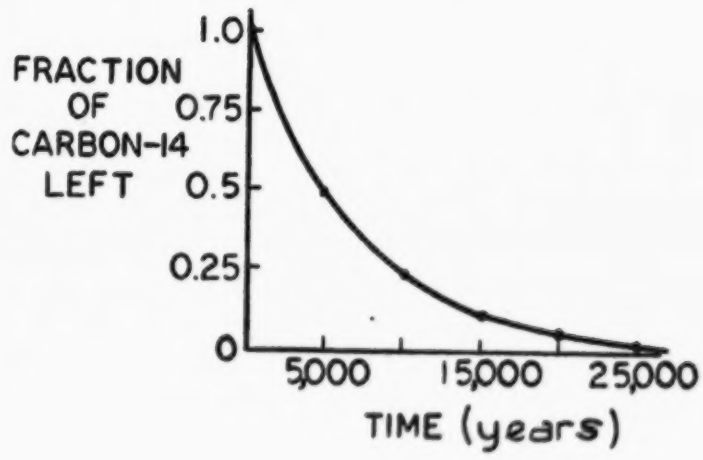

3-7 Experimental data on the growth of a population of yeast cells are given in the accompanying table.

Time (hours)	Number of Cells
0	6
2	10
4	48
6	117
8	234
10	342
12	397
14	428
16	438
18	442

(a) Plot a graph of the number of cells versus time in hours. What is the population at 9 hours?

(b) The shape of the curve is exponential at first as the cells multiply, but it soon levels off as the supply of food becomes limited. The curve is called a sigmoid. What would you estimate the population to be at 30 hours?

(c) Although your estimate may be an accurate one, based on the tabular model above and its graph, it is probably not correct in the real life of a yeast colony. If the table were continued, it would show that the population decreases somewhat as the environment becomes poisoned. During what time intervals is the rate of growth a maximum? A minimum?

Ans.:

(a)

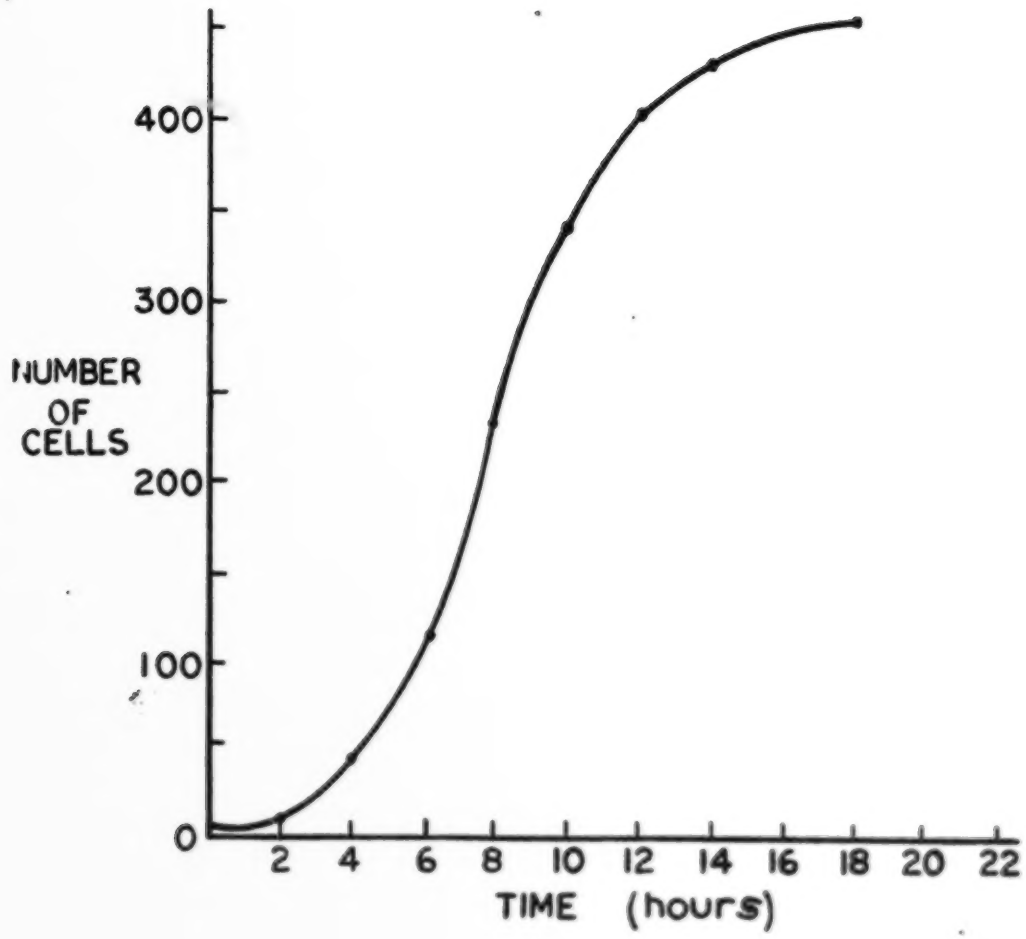

Population at 9 hours is about 300 cells.

(b) Apparently it levels off, so best guess is about 450 cells. As explained in the problem, however, the population actually begins to drop, reaching a new plateau of around 375 cells. Students have no way of knowing this from given data.

(c) Rate of growth is a maximum where slope of curve is the steepest. This is about at 8 hours. From tabulated data, greatest change is between 6 and 8 hours, 117 cells. Maximum rate of growth is thus 58 cells/hour, or about 1 per minute. The minimum rate of growth is found between 0 and 2 hours, and also between 16 and 18 hours. In each case it is a change of 4 cells, or 2 cells/hour.

3-8 List and discuss some systems like the air-conditioner example which can be described by several different models.

Ans.:

1. Automobile (mechanical, electrical, hydraulic, cooling system, fuel system, engine)

2. House (structural, ventilating, electrical, heating)

3. Human (structural, respiratory, circulatory, digestive, nervous)

V. Development

Section 1. The Nature of Models

A brief discussion of what a model is with J. G. Saxe's, "The Blind Men and the Elephant" is good introduction to the chapter. Be sure to get across the main theme that models are universally used representations of the real world.

Every thought, every description (verbal or otherwise), is a model; they represent our ideas of what objects and relationships in the world around us are all about. One looks at another person--that person is the real world, and what exists in the mind of the observer is a model.

Models are simplified reality; they are manageable representations of the real thing. They contain the essential qualities of the system being modeled and so, if accurately formulated, can be said to be effectively equivalent to it. It must be emphasized, however, that all models are approximations to that which is modeled. They are formulated by observation and measurement in the real world, and they are filled out with data taken from the system under consideration, but they can never be completely equivalent for an entire system.

Satisfactory models are usually achieved by successive refinement. A preliminary model is designed, it is tested against the real-world prototype, then it is modified--so there is a continued process of successive approximations to a reasonably accurate and revealing fit. It is essential to alternate back and forth between the real physical world and the modeling domain. Without this continual testing and refining process, models can lead to misleading results, and if models are inaccurately conceived or too simply structured the results will be unrealistic and useless. Developed realistically and accurately, models are extremely important and useful tools which have far-reaching effects.

Models are used functionally as well as descriptively. They are employed systematically in engineering not only to describe a set of ideas but also to evaluate and predict the behavior of systems before they are actually built. They can save enormous amounts of time and can avoid expensive failures. Models permit the optimum design to be found without trying out many versions of the real thing. Examples are to be found in scaled-down functional models like those of aerodynamic vehicles tested in wind tunnels, and in multi-variable network systems like models of population change for planning transportation systems.

Section 2. The Graph as a Descriptive Model

This section is a good example of a practical graphing problem. Figures 2 and 3 should be discussed as well as the entire mathematical relation of the model. In this example, we use the model to predict points which were not originally in our data sample. It is interesting to test this model from data taken from your own class. Enter these data on your own plot, find the y-intercept and the equation for the graph. It should be interesting to find that your graph may differ greatly from the example made up in the text. (The equation from one school with 23 boys - 18 seniors, 4 juniors and one sophomore was: $W = 3.9h - 123$). Be sure to emphasize that the model may not be used to predict beyond the region of results obtained experimentally.

Section 3. A Descriptive Model of Traffic Flow

This section deals with a problem which is close to what every student faces everyday - namely the school corridor traffic problem. Here the student understands very well the difficulty encountered in obtaining the data for the model. The discussion of this section coupled with the traffic flow experiment will really make the student understand the problem posed and the benefits of such a study.

Section 4. A Descriptive Model for Air Flow

This section is one of the few in the entire course which deals with a model which is not mechanical or electrical. It may cause some students to squirm and lose sight of the purpose of this section.

To understand the model, a few simple rules of aerodynamics are shown and the definitions of all variables are given. The model then indicates the exact relationship between flow and pressure differences in the trachea and the bronchial tubes.

The complete model is developed by three measurements - two measurements of pressure and one measurement of flow.

The slope-intercept equation is drawn to find the approximate equivalent of the model. The complete mathematical model for describing the air flow as related to the pressures at various points yields four equations. Substituting the pressures, the flow rates can be found by substitution of the first three equations into the fourth. This section vividly demonstrates that the model has permitted us to make relatively simple determinations of flows for given pressure conditions, revealing some important quantities in the system which were not directly measured.

Section 5. Dynamic Models

Systems, and the models which they represent, may be either static or dynamic. Some models such as those which reveal the relationships between variables like height and weight, or those which show how air pressure and flow in the respiratory tracts of animals are related, are static. They demonstrate events in a system at one slice of time, and in this "snapshot" represent a situation in which there is no change.

Dynamic models, on the other hand, introduce the notion of changes in time. In these models which are more like a motion picture than a snapshot, variables which change in some orderly way are represented. Models of population change in a town or in the world speed of development of epidemics, or some aspects of a heating plant are all representative of dynamic systems.

Section 6. A Population Model

20% of all the people who have ever lived are alive today. This is a vivid kick-off for a discussion on the population model and "explosion".

Using table 2, the concept of $\sum$ or summation of population is introduced. The teacher should use his or her judgement about revealing that this is integration.

The histogram (Figure 16) reveals the relationship that the heights of the bars go up each ten years, but become increasingly larger. A smooth average line may be fitted by connecting the corners of the tops of the bars. This produces a non-linear line which is exponential.

Many, if not most, systems in the real-world are non-linear, and the output is not relative to the input in a simple, constant-proportional way. Population growth, the build-up of a rolling snowball, and the cooling of a cup of coffee are all non-linear processes. In these particular cases, the output of the system at any particular time is related to the input in such a way that it depends on the particular state of the system at that time; the relationship, therefore, is not constant, and a graphical plot is not a straight line.

Exponential change in time is an important kind of non-linearity. It is extremely prevalent in nature and in engineering. The examples cited above are exponentially-behaving systems; growth and decay are proportional to accumulated size--that is, the larger a quantity becomes, the faster (or slower) it grows.

The population model is expanded in Figure 18 to the year 2200 and in Figure 19 to the year 2700 to reveal a fantastic growth rate which surely is not expected. At the present time, there are approximately 2250 persons per square mile while the population model predicts 15 persons per square foot by the year 2692.

Section 7. An Improved Population Model

It is obvious from the above figures that the population model is incorrect. Biologically, there are many examples which parallel human population growth. At first, these models grow exponentially but the rate of growth sooner or later begins to lessen and in time will reach zero. One estimate expects our population to stabilize at a value of a little less than 10 billion in about 100 years.

Although the present increase in population is about 2% per year, there is no doubt that this rate must decline. Biologically, either the birth rate must decline or the death rate must increase. In spite of some opposition to birth control, the other alternatives to limiting the population are highly unpleasant alternatives. The present growth of human population is the result of our conquest of disease and the enormous increase in our food supply. This leveling-off of various biological examples follows an S-shape curve known as a sigmoid.

Section 8. Uses of Population Models

Local, state and federal agencies use population models to predict transportation needs, school planning, and recreation areas. Voting districts use census figures which change every ten years and sometimes do not fairly represent the changing population picture. Often the effects of a model react on the real world, changing it. In planning a more effective transportation system, for example, a model may indicate the need for increased facility in a particular region. If that indication is put into practice, the region may then become even more populous, since with adequate transportation facilities, towns tend to grow larger more quickly.

Section 9. Model Application

Many models can represent one system. For example, an air conditioner can be described by a thermodynamic model which relates to heat transfer through the systems, a control model which represents the functions of thermostat, electrical parts and wiring network, or a mechanical model which describes the moving masses, their mountings, and their vibrational and acoustical couplings. Each of course is a partial model which cannot represent the entire system, but each has great utility in permitting analysis, prediction, and design control of important sub-systems of the whole ensemble.

Conversely, one model can represent many different systems. For example, exponential growth and decay describes the behavior of a large number of phenomena. Besides population, cups of coffee, and snowballs, such disparate things as the growth of living organisms, the spread of chain letters, coasting to a stop, accumulation of compound interest and the operation of nuclear reactors all behave according to exponential laws.

Section 10. Model Equivalence

Models start out by being conceptual--a set of ideas about some real-world system. They can then be expressed in many different but equivalent ways. The idea of equivalence can be seen by considering that the real-world system is a "black-box" having certain inputs and outputs. What is important is the functional relationships between inputs and outputs--the changes that occur at the outputs as various signals are applied to the inputs. For equivalent functional representation, what is inside this or any other "black-box" is immaterial so long as the input-output relationships are analogous. Thus if we consider a real nerve cell, for instance, with its complicated stimulus-response relationships we can have many "black-box" equivalents. So long as the signals change appropriately with specified input signals, it is immaterial whether what resides within the "black-box" is a real nerve cell or anything else whatever.

Of the many different kinds of modeling vehicles available, there is generally little difficulty in making an appropriate choice for a particular problem. One chooses the most revealing (economy being a constraint).

Very often a mathematical model becomes quite complex and it is convenient to resort to a computer simulation. When there are many variables and many simultaneous equations to handle, the speed and flexibility of a computer (either digital or analog) provide a very powerful modeling vehicle.

In being able to manipulate numbers quickly, accurately, and flexibly, computers permit various modeling quantities and relationships to be easily handled and changed so as to run rapidly through the properties and predictions of many different versions of a model.

In this case, the programmed computer becomes a working model itself. It literally then can be a functioning representation of the cooling of a cup of coffee, the growth of world population, the vibration in an air conditioner, or even of another (difficult) computer.

Sometimes however, even the very flexible mathematical or computer simulation models are inconvenient or impossible. The complex, nonlinear interactions of some systems are at times sufficiently intricate that the construction of special-purpose hardware (like an electronic or hydraulic analog) is much more appropriate. In such cases one introduces the electrical or fluid signals at the input of the model and observes its performance by measurements of the output.

Section 11. Summary

The overall intent, then, of this chapter is to show how models are present in all our consideration of the real-world, how they range from vague imprecise verbal constructs to highly accurate and revealing abstractions which can be implemented in many forms, and how models are used in engineering for analysis and design evaluation and prediction, thus leading to a more complete understanding and control of the real world.

VI. Laboratory Experiments and Placement

There are three laboratory experiments for this chapter. Experiment XII: Is it an Elephant? is similar to the Chem. Study where the student tries to predict the contents of a container without access to the interior. Exp. XIII: Measurement Modeling and Prediction, is intended to predict cap and gown size for graduation from a sample taken in the Junior year. Exp. XIV: Traffic Flow Study, is closely related to the material in the text (and could be modified to follow the text exactly).

VII. Transparencies

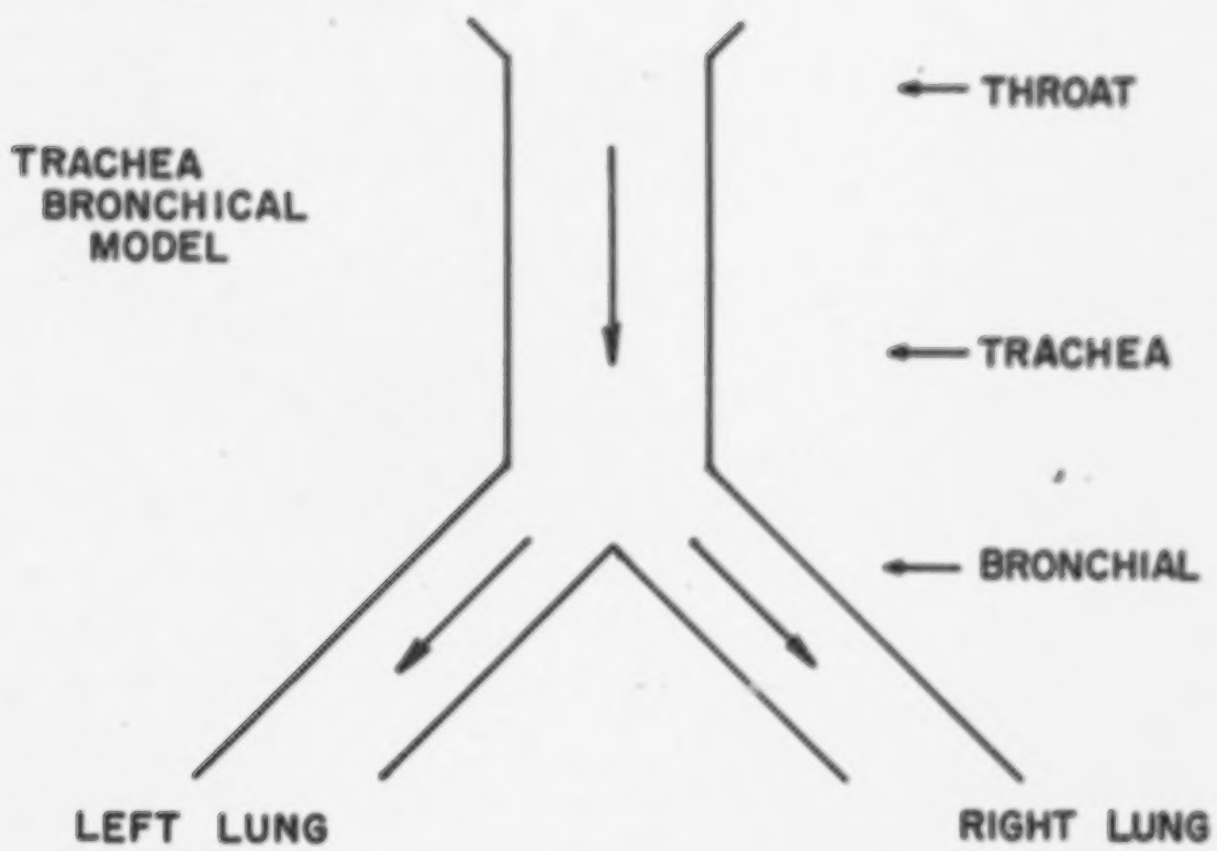

VIII. Quiz, Test & Discussion Questions

A. Quiz Questions: (Text section in parenthesis)

1. (1) "No model is ever complete". Would it be helpful if one could in fact construct a complete model? Explain briefly.

   Ans.: A "complete" model would have to be completely equivalent to the entity modeled, and so would lose all the advantages of a model.

2. (1 & 5) Discuss the differences between (a) functional and descriptive models; (b) dynamic and static models. Give an example of each.

   Ans.: A descriptive model is usually static: it does not change with the passage of time. A functional model is usually dynamic, and allows for the changes that occur as time goes by. The first three models in the chapter are descriptive, the population models are functional.

3. (1) Suggest two reasons why a mathematical model may be specially desirable.

   Ans.: Inexpensive, convenient for computation of predictions (including "computerizing"), precise in showing relationships, often easy to refine, etc.

4. (1) When a model is first designed, what is the next step which should be taken with it?

   Ans.: Test it against reality.

5. (2) Fig. 2 shows the height-weight data for 17-year-old men as a somewhat scattered cloud of points. Explain why it is reasonable and useful to draw a particular straight line through these points.

   Ans.: The straight line offers a quick way to approximate the average weight for each given height (or vice versa), and also offers a quick way to represent the data with an algebraic equation as a model.

6. (2) The greatest height shown in Figure 3 is about 6 feet. Would you be justified in using the graph to predict the weight of a candidate for end, 6'6" tall? Why?

   Ans.: This is an extrapolation, but not very far beyond the measurements. Since the latter scatter anyway, it may not be unreasonable to make the prediction as suggested. But either a yes or a no answer should be acceptable if supported by good reasoning.

7. (4) Can the graphical model of airflow and pressure in the breathing apparatus of an animal (Figure 14) be used when it is breathing out? If so, how? If not, why not?

   Ans.: Yes. Use the portion of the curve in the 3rd quadrant.

8. (5) The diaphragm control on a camera is often marked with the following numbers (called stops): 11, 8, 5.6, 4, 2.8. In going from any stop to the one with the next smaller number, the amount of light admitted to the film at a given shutter speed doubles.

(a) If the light admitted at stop 2.8 is called "L", how much light is admitted at stop 11, shutter speed remaining the same?

(b) If the proper exposure for certain conditions is 1/25 sec at stop 11, what would it be at each of the other stops?

(c) Do the answers to (b) form a linear or a non-linear relation?

Ans.: (a) L/16.

(b) At stop 8: 1/50 sec; at 5.6: 1/100 sec; at 4: 1/200 sec; at 2.8: 1/400 sec.

(c) Non-linear. (since stop area x time = constant, this curve is a hyperbola.)

9. (5) Suppose you have a cube of wood, L units on a side. Now cut the cube into smaller cubes, each $\frac{1}{2}$ L units on a side. Cut these in turn into cubes each $\frac{1}{4}$ L units on a side, and so on.

(a) What is the total surface area of the original cube?

(b) What is the total surface area of the 8 cubes which result from the first cut?

(c) What is the total surface area of the cubes resulting from the second cut?

(d) Is the increase in area linear or non-linear?

Ans.: (a) $6\ L^2$

(b) $12\ L^2$

(c) $24\ L^2$

(d) Non-linear

10. (6) In the text, several factors which affect the growth rate of a town are listed: birth rate, death rate, nearness of other crowded towns, transportation system. Suggest 5 other factors which might influence the growth rate of a town. In each case, explain briefly why the factor would be likely to increase or to decrease the growth rate.

Ans.: For example: Cost of real estate (if high, negative effect on growth rate).

Ans.: For example: Cost of real estate (if high, negative effect on growth rate).

Quality of schools (if high, positive effect).

Tax rate (high, negative).

Water supply (good, positive).

Sewer system (adequate, positive).

Well-paved roads (positive).

Good public library (positive).

Shops (if numerous and varied, positive).

Local industries (probably positive up to a point, but debatable).

Zoning law (if stringent, negative, perhaps; debatable).

11. (9) We have seen that it is possible for one system to have a number of different models which apply to it. Many times an engineer finds it necessary to have models of sub-systems. Suggest 3 models which could be used to describe a submarine.

Ans.: Models of heat flow, controls, engines, periscope, etc.

B. Test Questions

1. Below you will find a model of adult male rabbit trachea-bronchial systems as measured and reported by Dr. Jones after studying 1000 normal, healthy male adult rabbits.

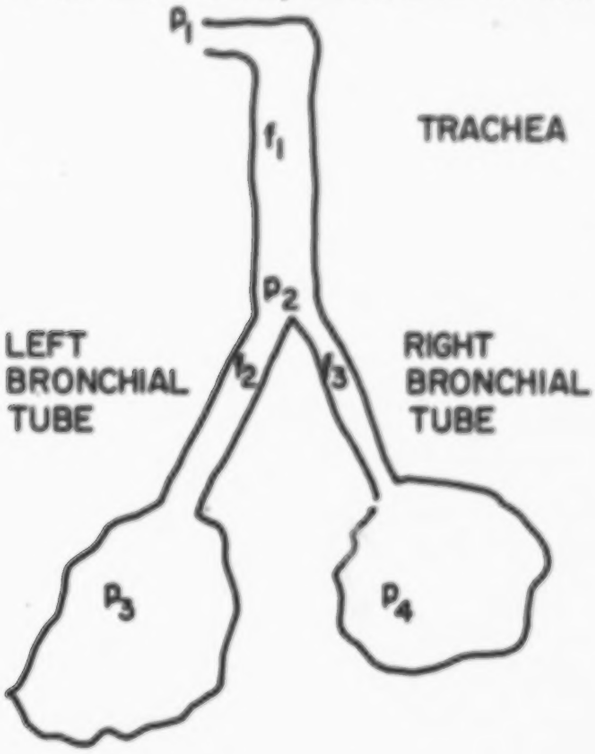

p_1 = pressure at mouth

p_2 = pressure at branch of bronchial tubes

p_3, p_4 = pressure at left and right lungs

f = flow rate of air in respective tubes in cu. cm. / sec.

$$f_1 = 2\,(p_1 - p_2)$$

$$f_2 = 1\,(p_2 - p_3)$$

$$f_3 = 0.5\,(p_2 - p_4)$$

$$f_1 = f_2 + f_3$$

Questions:

a. What is the physical meaning of the coefficients 1.0 relative to 0.5 of the left bronchial tube vs. the right bronchial tube?

b. If $p_2 = p_4$ how much air will enter the right lung in one second?

c. If $p_2 = 2p_3$, is the left lung taking in air or exhaling air?

d. If $p_1 = 760$ mm. Hg., $p_3 = 770$ mm. Hg., $p_4 = 780$ mm. Hg,

find $f_3 =$ _____.

Ans.:

a. The slopes of the flow (f) vs. pressure difference (Δp) curve are the coefficients 1.0 and 0.5 and correspond to the size of the left and right bronchial tubes respectively.

b. $f_3 = 0.5\,(p_2 - p_4) = 0.5\,(p_2 - p_2) = 0.5\,(0) = 0.$

c. $f_2 = 1\,(p_2 - p_3) = 1\,(2p_3 - p_3) = 1(p_3) = p_3$;

therefore, the left lung is taking in air.

d. $$f_1 = f_2 + f_3$$

$$2(p_1 - p_2) = 1(p_2 - p_3) + 0.5(p_2 - p_4)$$

$$2(760 - p_2) = 1(p_2 - 770) + 0.5(p_2 - 780)$$

$$1520 - 2p_2 = p_2 - 770 + 0.5p_2 - 390$$

$$1520 + 1160 = 3.5\,p_2$$

$$2680 = 3.5\,p_2$$

$$766 \text{ mm. Hg.} = p_2$$

$$f_3 = 0.5(p_2 - p_4) = 0.5\,(766 - 780) = 0.5(-14) = -7\frac{\text{cu. cm.}}{\text{sec.}}$$

$$f_1 = 2(p_1 - p_2) = 2(760 - 766) = 2(-6) = -14\,\frac{\text{cu. cm.}}{\text{sec.}}$$

2. Popville, Nebraska had a population of 10,000 people in the year 1966. A study of the population trend for Popville shows that the town has been losing people at a rate of 1% per year. Predict the town's population in 1968 if you assume no change in this rate.

Ans.:

Population at the end of the year 1967 is $10,000 - (0.01 \times 10.000) = 10,000 - 100 = 9,900$

Population at the end of the year 1968 is

$9,900 - (0.01 \times 9.900) = 9.900 - 99 = 9,801$

3. Below is a graphic model of the height-age growth function of girls at East High School:

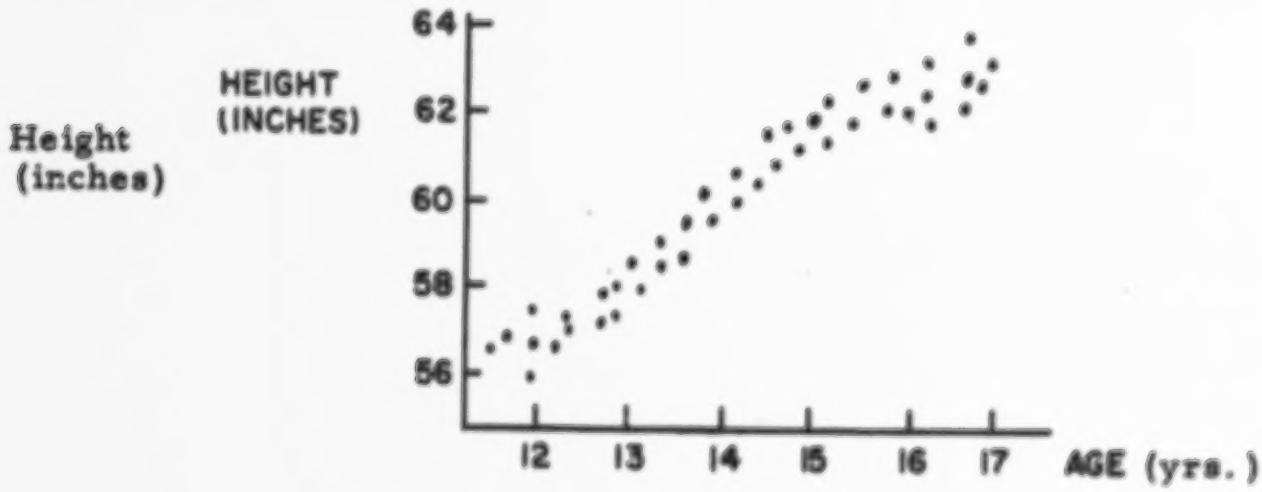

a. Place a "curve" in the grid above that most accurately predicts average for all the girls.

b. What is the average growth in inches per year for this group of girls between ages 14 and 16?

c. If Sue is 12 years old and is 56" tall, what statements can be justifiably drawn from this graph concerning her height when she is 17?

Ans.:

a.

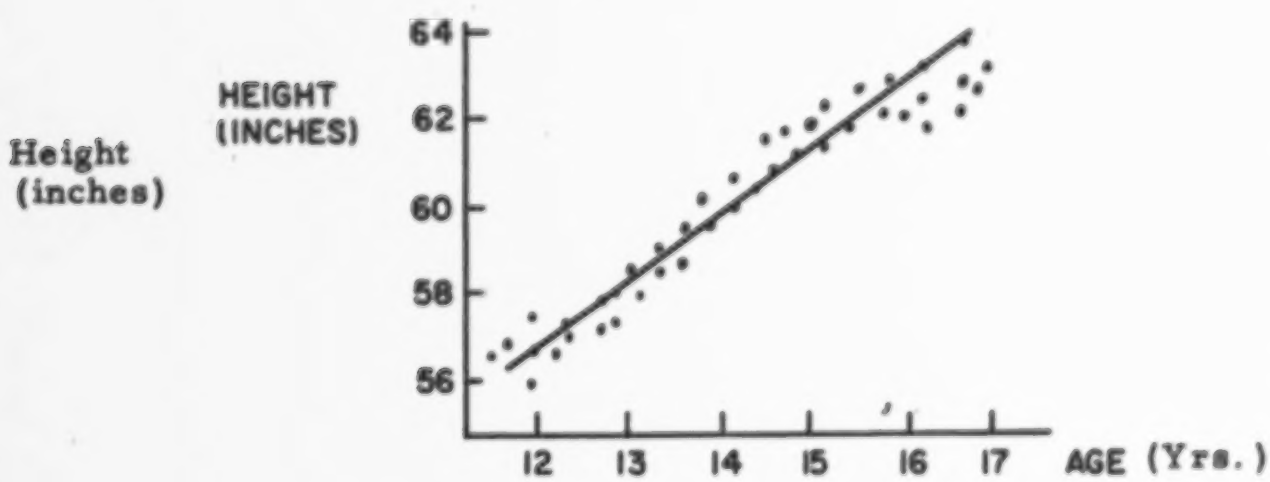

b. $62\frac{1}{2} - 59\frac{1}{2} = \frac{3 \text{ inch}}{2 \text{ years}}$.

c. If Sue is an average girl from East High School, then it can reasonably be expected that she will be approximately 64 inches tall when she is 17 years old.

4. Hi-Fi engineers often use an electric circuit model of a loudspeaker and its enclosure. Is this model functional or descriptive?

Ans.:

A descriptive model is a verbal picture, therefore, the model is functional - it acts in a normal expected way.

C. Discussion Questions

1. A good balsa wood scaled-down model of the SST (super-sonic transport) has many properties of the envisioned real aircraft. List five of the properties of the real aircraft that the balsa wood model cannot represent.

Ans.:

a. Skin temperature

b. Strength of material

c. Ratio of weight to length

d. Any internal functions

e. Effect on plans of shifting rudder and flaps (while they are changing position)

f. Psychological effect on passengers

2. Automobile manufacturers make clay-wood mock-up models of their "new" cars while they are in the planning stages. List as many good reasons you can think of for this modeling job.

Ans.:

Esthetic design

Contour of dies

Style
Streamlining

3. There are many biological limits on population growth, mainly food and space. A tactful approach to a discussion of birth control or any of the many other means of controlling or causing a limit on birth would be very beneficial to discuss in Chapter B-3.

IX. Supplementary Materials

A. Supplementary Ideas That Can Fit Into Text Exposition

1. In developing the idea of integration under a curve (Fig. 16), one can show how the fineness of quantization of the histogram bars influences error. For instance if the bars are 25 years wide (instead of 10) the coarser steps which result will produce much larger departures from the fitted exponential curve. Conversely, as the intervals are made smaller, the number of steps increases and the maximum distance from any point on the staircase to the exponential curve gets smaller. In the limit, of course, the departure goes to zero (i.e., if the population is counted continuously there is no error).

2. An example of progressive model evolution which shows how real-world measurements and improved theoretical models interact to provide a converging approach to reality in exemplified by the development of celestial mechanics. The sequence of models represented by the ideas of Ptolemy, Copernicus, Kepler, Newton, and Einstein illustrate the point.

3. Chemical models are illustrated by simple rate-dependent reactions like mixing or catalysis, or by much more complex systems such as the intricate molecular models for genetic structure (see DNA- and RNA- based models which have been widely discussed; e.g., Scientific American within last two years).

4. Some other examples of exponential functions are: electric light heating or cooling (the turnoff of an automobile headlamp is readily perceived as non-instantaneous), embryo cell division (there are about 40 doublings for a human), crystal growth, transmission through a series of optical or acoustic filters.

B. Suggested bibliographic references:

1. Beament, J. W. L. (ed.): Models and Analogues in Biology. (Symp. of Soc. for Exptl. Biol., No. 14), New York: Academic Press, 1960.

2. Clough, G. C.: Lemmings and Population Problems. Am. Scientist 53(2), 199-212, June, 1965.

3. Davis, K.: Population. Sci. Am. 209(3), 63-71, Sept. 1963.

4. Harmon, L. D., and E. R. Lewis: Neural Modeling. Physiol. Rev. 46(3), 513-591, 1966.

5. Hesse, Mary B.: Models and Analogies in Science. University of of Notre Dame. Press, 1966.

6. Morkert, Clement L.: Biological Limits on Population Growth, New Haven: Yale Scientific Magazine, November 1966, pp. 6-8, 16.

7. Rosenblueth, A., and N. Wiener: The Role of Models in Science. Phil. Sci., 12: 316-321, 1945.

8. von Neumann, J.: The Computer and the Brain. Yale University Press, 1958.

9. Wynne-Edwards, V. C.: Self-regulating Systems in Populations of Animals. Science 147, 1543-1548, 26 March, 1965.

10. Current issues of Popular Science and Scientific American have many good examples of modeling.

C. More Realistic Model of Population Growth

In the 1966-67 text, an improved population model section was included and is presented here if the teacher so desires.

We note that although the present rate of increase of world population is 2%, it will not remain constant. There are several reasons why we can expect that it cannot continue to be the same or to grow larger indefinitely. In order to make our dynamic model more realistic, we must include a factor which accounts for the possibility of changes in growth rate. It then is possible to develop a more realistic model in which the population will not grow indefinitely.

It is easy to do this if we change the form of our original expression, which was:

$$P = P_o + \sum p_i$$

i.e., the total population at any time is expressed as the original population plus the sums of all the increases. An alternative way to state this symbolically is to note that a 2% increase means that the population for a particular year is 1.02 times the population of the previous year. In the example we considered the population in 1966 is (3,000,000,000) (1.02) or 3,060,000,000. Similarly the population in 1967 is (3,060,000,000) (1.02) = 3,121,200,000. Suppose that we let P_n stand for the population in the nth year. Then we can write for the population of any 2 successive years:

$$P_{n+1} = 1.02\, P_n$$

The factor 1.02 in our example is called the net growth rate. If we symbolize this by r, then we have a general formula for our sample demographic model:

$$P_{n+1} = r\, P_n$$

Now what we need is a way not to express r as a constant value such as 1.02, but to give it some flexibility so that the effects of various changing influences on population growth rate can be included.

What we need is a new net growth rate R which gets smaller as the population P increases. With this the continued snowballing caused by a constant growth rate can be pinched off. This reflects the factors such as those we mentioned which tend eventually to limit the maximum size of the population.

We can introduce a hypothetical growth rate R so that

$$R = r - c(P - P_o)$$

This means that the new growth rate is equal to the old growth rate minus a quantity that is proportional to the change in population. The quantity c is a constant, and $(P - P_o)$ is simply the growth of the population from the initial to the present value. As the population grows larger the net growth rate R becomes progressively smaller, since $c(P - P_o)$ is subtracted from the value of r.

For the purpose of illustration, we might assume that $c = 3 \times 10^{-12}$. Then we can calculate that as the population increases from 3×10^9 to 6×10^9

(hence a difference $P - P_o$ of 3×10^9) the growth rate changes from 1.02 (our old 2% increase) to

$$R = r - c\,(P - P_o) = 1.02 - (3 \times 10^{-12})\,(6 \times 10^9 - 3 \times 10^9)$$

$$R = 1.02 - (3 \times 10^{-12}) \times (3 \times 10^9)$$

$$= 1.02 - (9 \times 10^{-3})$$

$$= 1.011$$

We can plot this new growth rate as a function of the changing population as shown in Fig. 22. The line plotted has a slope of -3×10^{-12} (which is the constant rate decrease we assumed). It starts at R=1.02 (the old 2% rate) and becomes progressively smaller as the population increases. When the population grows to 7.2 billion the rate drops to 1.007 (i.e., only 0.7%), and at 9.67 billion it has dropped to zero; no further growth occurs, and the population has become stable.

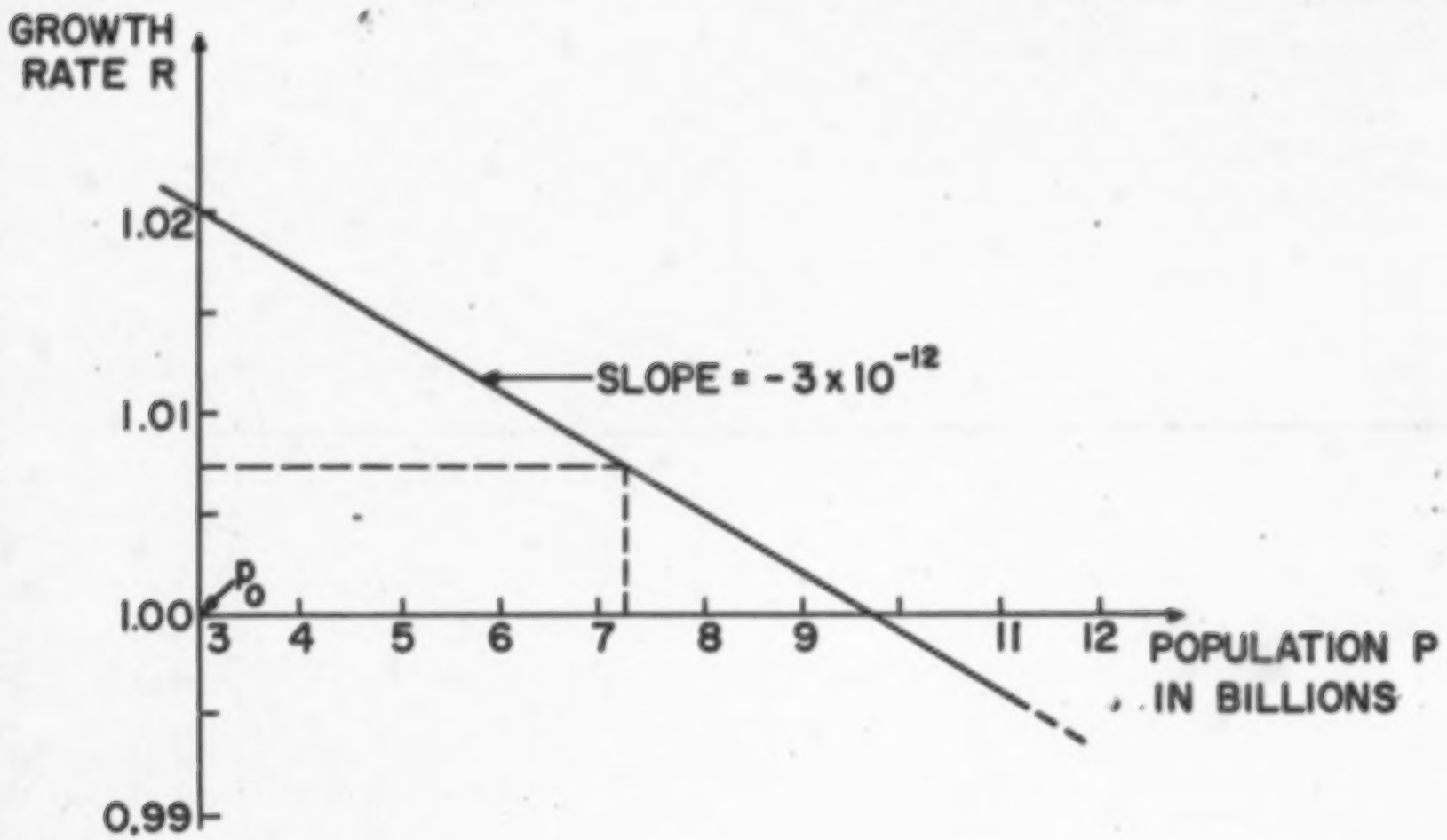

Fig. 22 Hypothetical changing rate of population increase as population grows.

By substituting our new variable rate R into the expression for our model, we have:

$$P_{n+1} = RP_n$$

or:

$$P_{n+1} = [r - c(P_n - P_o)]\, P_n$$

We now can construct a new graph which will predict the population growth with a variable rate of increase. If our original population is $P_o = 3 \times 10^9$, Fig. 22 indicates a rate 1.02 for the year. At the end of the first year the population will be $(3 \times 10^9)(1.02) = 3.06 \times 10^9$ an increase of (0.6×10^9).

Our equation can now be used to find the population for the next year]

$$P_{n+1} = [1.02 - 3 \times 10^{-12} (.06 \times 10^9)]\, 3 \times 10^9$$

This new population (P_{n+1}) is now used as the initial population (P_n) and the new rate $[r-c(P_n - P_o)]$ replaces the original rate (r). The computation is repeated for each succeeding year until enough data are secured to complete the graph.

With this new plot of the total population over the years, as in Fig. B-23, the effect of a constantly diminishing R is clear. The increase of population levels off rather than grows explosively, and for the particular rate of change we assumed, it effectively cuts down the population growth rate to zero in less than a century. The population now stabilizes at a value of little less

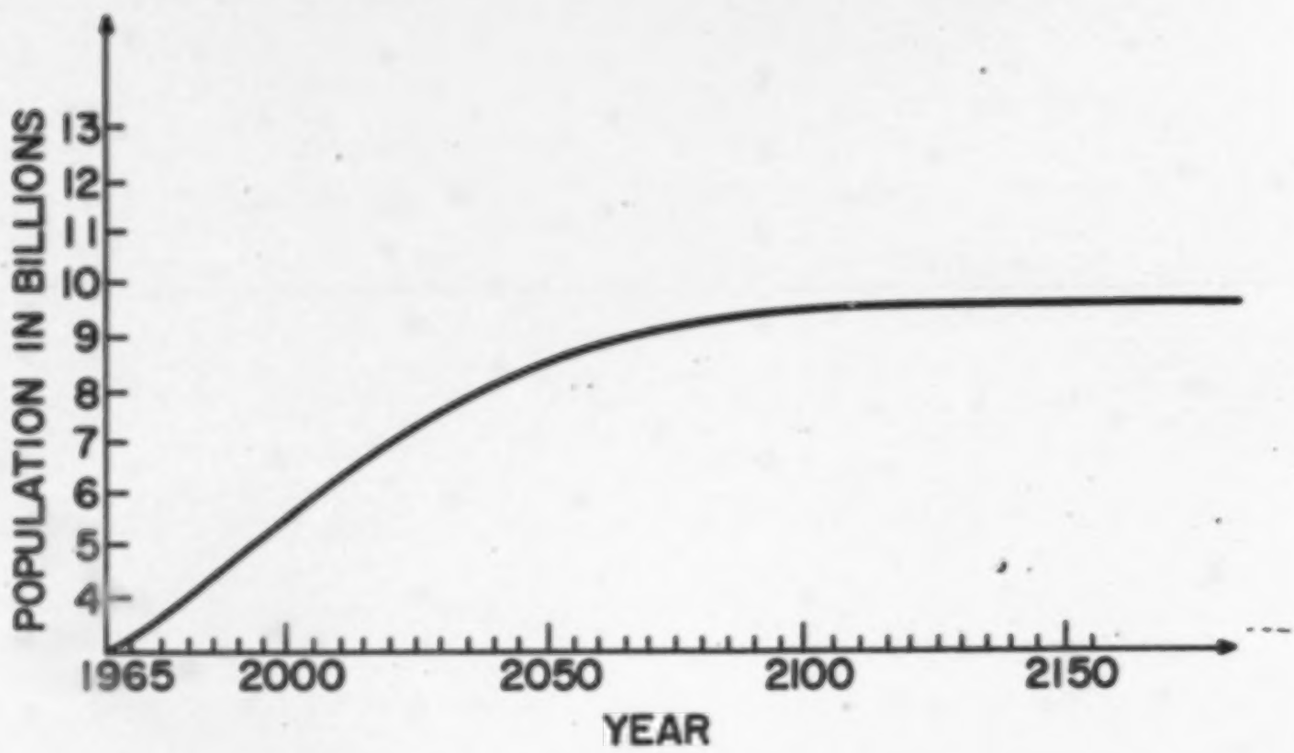

Fig. 23 With a decreasing growth rate as population goes up, the total grows more and more slowly, finally approaching a stable limit at 9.67 billion.

than 10 billion. We see from Fig. 22 that if the population should happen to increase past this value (the factors influencing growth rate may vary somewhat

and so cause some temporary fluctuations), then R becomes negative, and with a negative growth rate the population begins to decrease, back to where R = 1.

On the other hand, if a temporary fluctuation causes a population decrease to the point where the growth rate R becomes positive again, then there will be once more an increase until the population levels off. R has a stabilizing influence, and the population will tend to stay in equilibrium at the 10 billion value where R = 1 (where the birth and death rates are equal).

This is a model which is entirely hypothetical and should not be taken as an exact prediction of things to come. Although we have seen that with the replacement of a constant growth rate with one which depends on the magnitude of the change, we do get a reasonable model that predicts leveling off to a stable equilibrium, the model must be tested by checking it against the real world. Unfortunately the variable rate of increase which we assumed (Fig. 23) was not based on real data. That kind of information is not yet available in sufficiently accurate form, though increasingly detailed demographic studies may soon make possible a more dependable and realistic value.

Undoubtedly the many factors which influence population growth will make necessary a still more complex model. Social, economic and political factors change their values rapidly and these will effect changes in the model as time goes on. The process of continuous testing and modification of models to make them agree with or predict various aspects of the real world is an important and challenging aspect of model making.

D. Demonstrations

1. As an introdution to modeling the teacher may wish to use the following item: (one extra day if used)

   A consultant to a pipe line company that just completed a new line over rolling hill country was confronted with the problem of the pump motors burning out before oil was delivered at the terminal of the pipe line. In formulating his solution the consultant built a model as shown below.

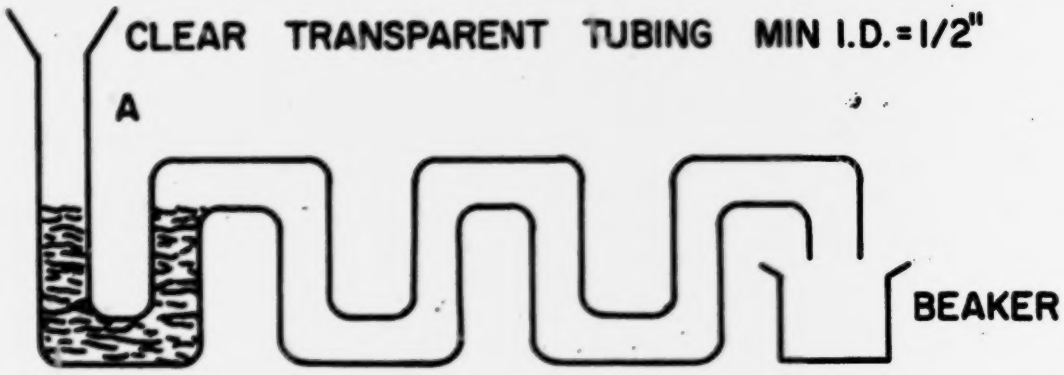

Fig. 1

   Colored water is added to the open tube until it stands in equilibrium as shown in Fig. 1. The pupils may then be asked, "What will be the height of the water level in tube A when the first drops are delivered to beaker B if we add more water to tube A?"

The pupils may be surprised to find that the liquid level in tube A will be more than twice the height of each "hill".

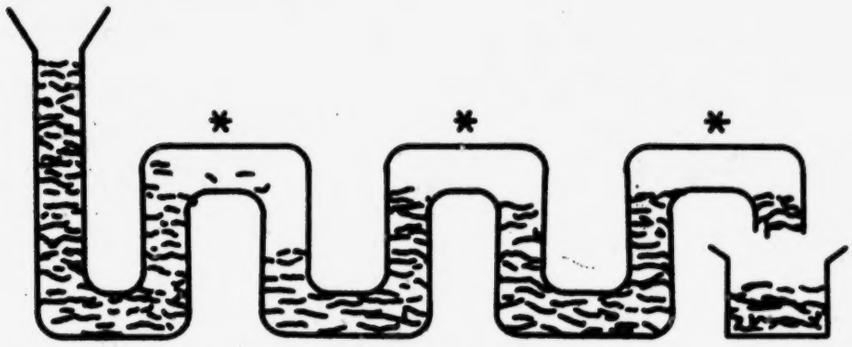

Fig. 2

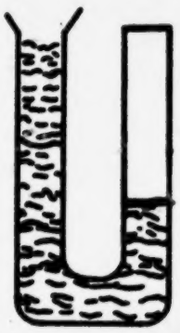

Fig. 3

This phenomenon can be explained by using a second model. (Really a model of a model.) Assume the tube to be in the shape of a U with the trapped air in the right hand column. The fluids will be in equilibrium as shown in Fig. 3.

The consultant solved the "real life" problem by installing "bleeder valves" at the top of the hills where air was trapped in the pipes.

The demonstration apparatus can be easily assembled using approximately 12 feet of clear plastic tubing (be certain to use large, clean tubing--at least 1/2 inch inside diameter) and a piece of plywood to hold the tubing in the desired shape.

2. In discussing models the teacher may wish to show models of the DNA molecule and comment on its structure.

3. Industrial chemists use models in synthesizing new chemicals. The replacement of certain groups of atoms by other result in a new product with properties different from the original.

   The teacher can show some transitions using molecular models. If these are unavailable, toothpicks and gum drops may be substituted for bonds and atoms. A simple transition that may be demonstrated is Methane CH_4 is converted to methyl alcohol CH_3OH by the oxidation of one hydrogen atom

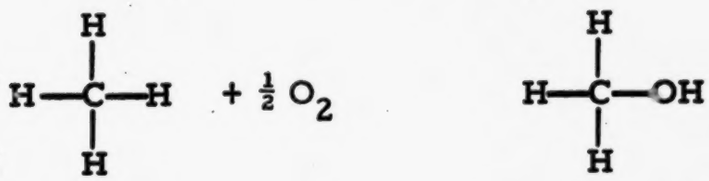

4. Transparent plastic models of bridges, airplane wings, etc., may be viewed in polarized light. When the transmitted light is passed through a second sheet of polarizing material, points of stress will be evident. An overhead projector, two sheets of polarizing material and the transparent plastic model will enable the entire class to view the areas of stress.

Chapter B-4
MODELS AND THE COMPUTERS

I. Approach

1. The analog computer used in the laboratory includes integrators. Much of this chapter is occupied with the development of the idea of integration (and of differentiation), without the calculus notation.

2. Models are static or dynamic (have motion and undergo change). Inputs and outputs to models are signals with numerical values and may be represented as graphical or model forms. Signals changing with time, as velocity and acceleration, may be determined by finding the slopes of the displacement-time graph and velocity-time graph respectively (or by differentiation). Velocity and displacement may be determined by finding the areas of the acceleration-time graph and velocity-time graph respectively (or by integration).

3. Analog computers may be used as functional models and by integration, velocity and displacement may be found from an acceleration signal. The analog computer model can represent many different systems.

II. Outline

1. <u>Introduction</u>

   The analog computer can be used to model many systems, some involving rate of change with respect to time.

2. <u>Signals, Inputs and Outputs</u>

   Signals are the numerical values of an input or an output and can be represented in tabular form, in graphs, or by equations. Some signals that can change with respect to time are velocity and acceleration.

   Labs XV, XVI, XVII can be started now (but see Part VI of these notes).

3. <u>Signals of Motion</u>

   In this chapter, motion is described and confined to motion along a fixed route (not necessarily a straight line). The position signal is called displacement, "x". Velocity and acceleration are defined in terms of the concept of "rate of change with respect to time." Both graphical and incremental definitions are given, and the symbol for increment (or difference), Δ is introduced. (The notations dx and dt are also introduced, but only briefly.) This section is long and will take several days. The concept of $x \rightarrow v \rightarrow a$ is important and then poses the question: Is this relation valid in reverse?

   Labs XVIII, XIX, XXI.
   Transparencies B-4.3a, 4.3b, 4.3c.

4. <u>The Relation: $a \rightarrow v \rightarrow x$</u>

   We expand the important meaning of an area under a curve and apply it to signals of motion. The concept of approximating the area under a curve by the area of a discrete number of rectangles is developed. In the process

of making this approximation better and better, the concept of integration is introduced. The meaning of the symbol $\sum$ (introduced in Chapter B-3) is amplified as indicating a sum of a discrete number of values while the symbol $\int$ is introduced as indicating the sum of an indefinitely large num- of values. Some differences between discrete and continuous models are discussed, the concept of "initial condition" (e.g., initial displacement and initial velocity) is explained, and the relation $x \rightarrow v \rightarrow a$ is verified. This section is also long and will require more than one day to fully develop. It includes an example of acid flow in gallons per hour vs. time in hours which is analogous to the $v \rightarrow x$ relation.

Labs XXII, XX.
Transparencies B-4.4a, 4.4b, 4.4c.
Film F-9.

5. <u>A Model of Motion</u>

A dynamic model describing the motion of a vehicle along a fixed route is discussed. A step-by-step procedure is used to develop a block diagram of the model where the mathematical relations among the several inputs and outputs are described (using the relation $a \rightarrow v \rightarrow x$ and information about the design of the acceleration control) in terms of blocks called scalors, adders, and integrators (or area-finders).

Lab XXIII.

6. <u>The Analog Computer</u>

Using the motion model as an example, a programmed analog computer is presented as a functional model which is applicable to many different systems. The schematic symbols for the analog computer components (adder, scalor, integrator) are presented, and the point is made that "operating" the computer is analogous to operating the real system.

Labs XXVI, XXIV, XXV (in that order).
Film F-8.

7. <u>Summary</u>

A simple restatement of the principal ideas and the key words and phrases of the chapter is presented. It should be emphasized that the analog computer can eliminate the need for construction and study of many full-size models.

III. Objectives

Students should clearly understand these ideas and concepts:

A. Dynamic modeling using models of motion as an example.

B. Meaning and use of signals for inputs and outputs.

C. The model of vehicle motion along a fixed route.

D. Differences between discrete and continuous models.

E. Meaning of displacement (x), velocity (v), and acceleration (a).

F. The relations $x \rightarrow v \rightarrow a$, and $a \rightarrow v \rightarrow x$.

G. The programmed analog computer as a type of functional model.

H. Use of one model to apply to many different systems, eliminating the need for full size models.

They should develop these skills:

I. To read, draw and use graphs (see IX A).

J. To find the slope of a curve and (approximately) to find the area under a curve.

IV. Homework Problem Solutions

Relative difficulty of questions in B-4:

EASY	MODERATE		DIFFICULT	
* 1.	3.	13.	5.	19.
* 2.	9.	15.	* 6.	20.
4.	* 11.	* 16.	8.	21.
7.	12.		14.	22.
10.			* 17.	
18.				

*Key Problems to be Attempted by All Students.

4-1. A graph of an automobile trip via an interstate turnpike is given below. Draw a graph of the velocity of the car during this trip.

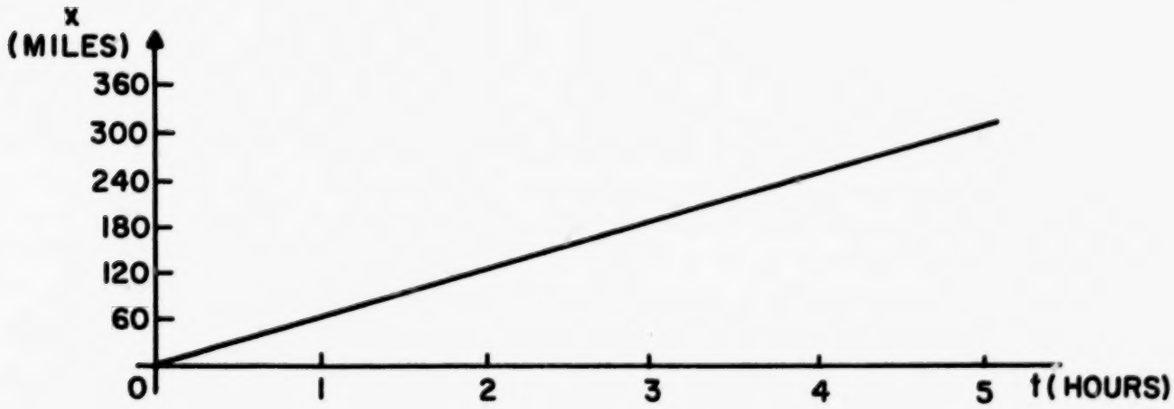

Answer: The graph is a horizontal line at 60 mi/hr.

4-2. A distance-time curve for a 100-mile auto trip is shown below. Determine the velocity:

(a) 120 minutes after the start.

(b) 30 minutes before the end.

(c) When the car is midway between the starting point and the destination.

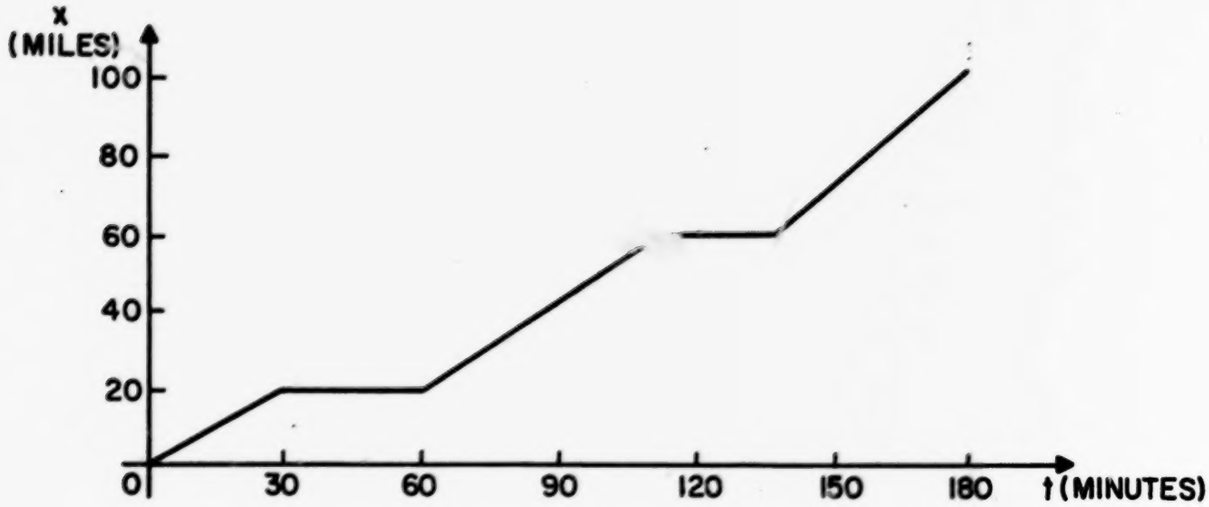

Answer:

(a) $v = 0$ because slope is zero.

(b) $v = \frac{\Delta x}{\Delta t} = \frac{100 - 40}{180 - 120} = \frac{60}{60} = \frac{1 \text{ mi}}{\text{min}}$ or $60 \frac{\text{mi}}{\text{hr}}$.

(c) $v = \frac{60 - 20}{110 - 60} = \frac{40 \text{ mi}}{50 \text{ min}} \times \frac{60 \text{ min}}{\text{hr}} = 48 \frac{\text{mi}}{\text{hr}}$.

4-3. It is found during an acceleration of a racing car that it is 15 feet from the starting point at the end of the first second, 60 feet from it at 2 seconds, 135 feet in 3 seconds, and 240 feet in 4 seconds. Plot these data as a smooth curve and determine the velocity at 2 seconds and 4 seconds.

Answer:

(a)

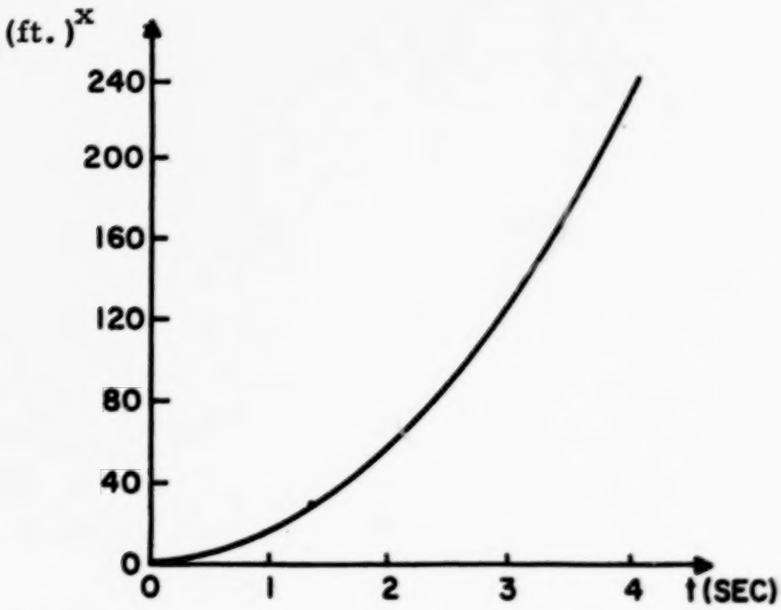

(b) $v = \frac{\Delta x}{\Delta t} = \frac{180 - 0}{4 - 1}$

$= \frac{180}{3} = 60 \frac{\text{ft}}{\text{sec}}$.

(c) $v = \frac{240 - 0}{4 - 2}$

$= \frac{240}{2} = 120 \frac{\text{ft}}{\text{sec}}$.

4-4. A river has a current velocity of 10 mi/hr. A motor boat on this river moves through the water at 30 mi/hr.

(a) What will be the actual velocity of the boat when going upstream?

(b) What will be the actual velocity of the boat going downstream?

Answer:

(a) Actual velocity = 30 - 10 = 20 $\frac{mi}{hr}$.

(b) Actual velocity = 30 + 10 = 40 $\frac{mi}{hr}$.

4-5. A graph of an automobile trip via a variety of roads and highways is given below.

(a) Draw two graphs of the velocity of the car during this trip, taking slopes at 30-minute intervals and at 60-minute intervals. What accounts for the difference in the two graphs?

(b) During which period of time was the velocity the greatest?

The least?

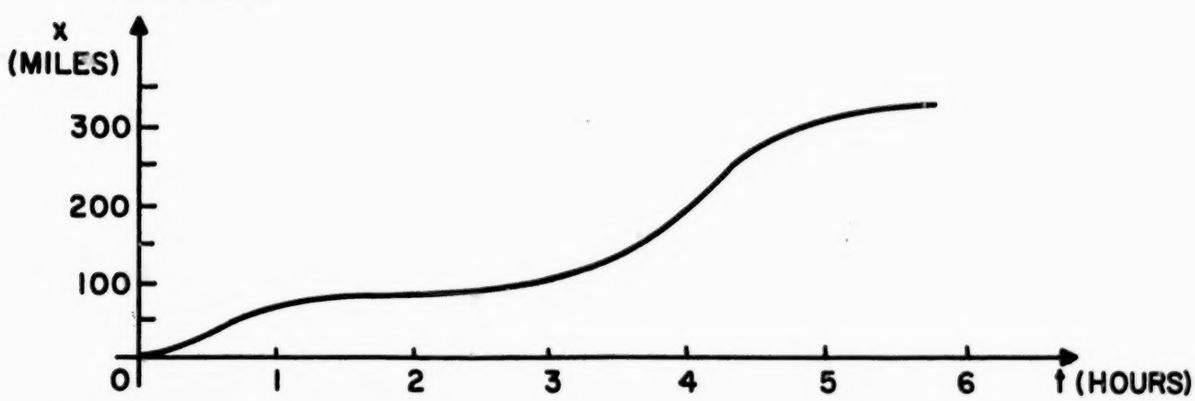

Answers:

(Note: both plots are given below on one set of axes, but the curves are omitted for greater clarity.)

(a)

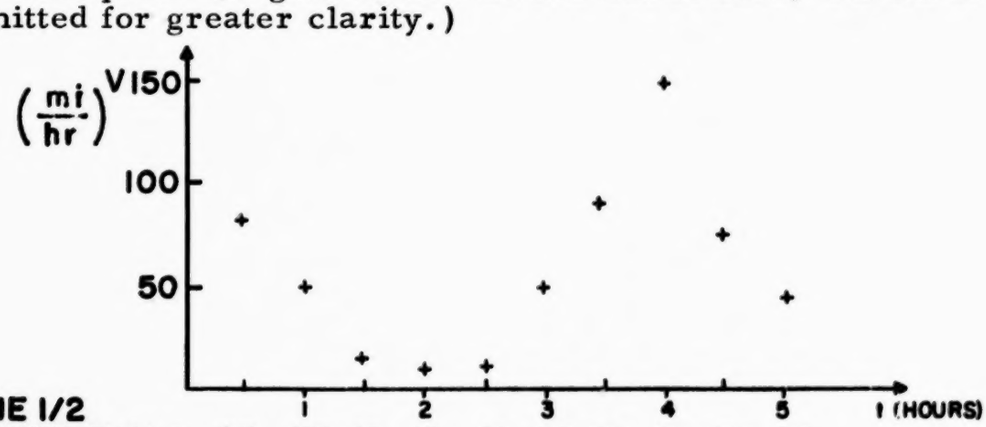

ON THE 1/2 HOUR INTERVALS	85	50	15	10	10	50	90	150	75	45
60 MIN INTERVALS		50		10		50		150		45

(b) $v = 150$ mi/hr at $t = 4$ hr ; v is too small to measure at the start, and is barely measurable at $t = 5.5$ hr.

4-6. The velocity of an automobile at various instants after starting time is given in the graph.

(a) Draw an acceleration versus time curve for this motion.

(b) With a graphical construction determine the acceleration of the car at the 8th second after the start.

(c) Describe the motion of the car between time 7.0 and 7.5 seconds.

(d) How far did the car travel between the times 7.0 and 7.5 seconds?

(e) Using the graph, determine the area underneath the curve as accurately as you can. How far did the car move between 7.0 and 9.0 seconds?

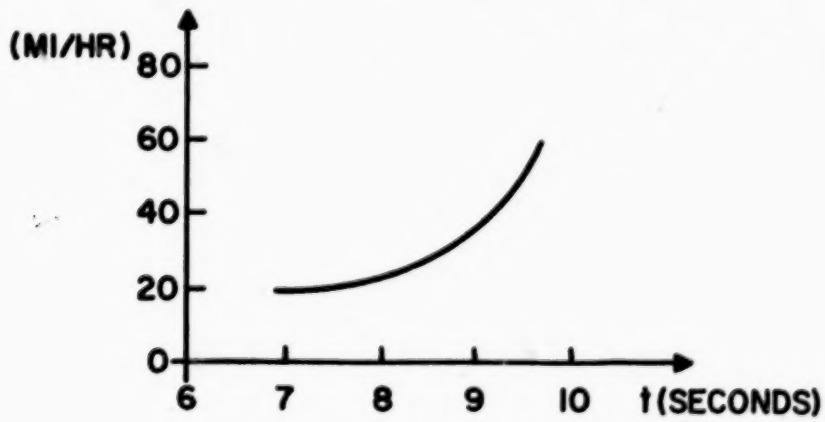

Answer:

(a)

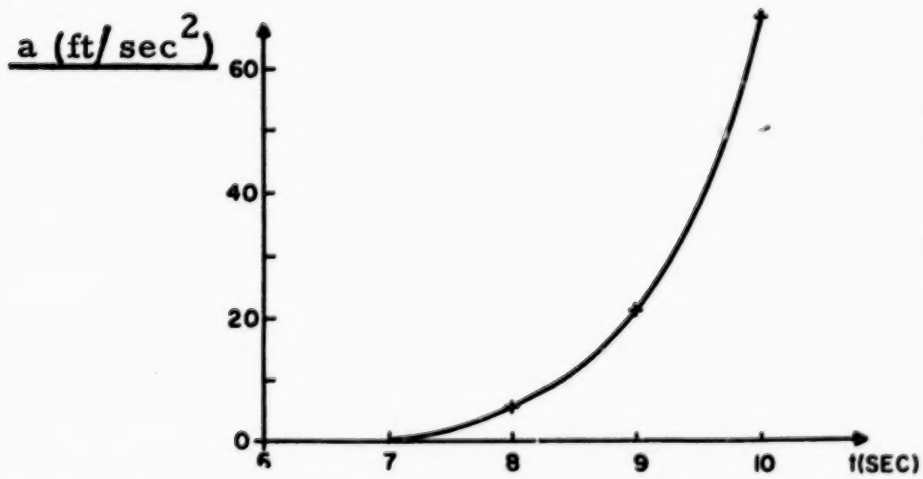

(b) approx. $6 \frac{ft}{sec^2}$.

(c) It accelerates slowly from 0 to about $2 \frac{ft}{sec}$.

(d) D = rate x time

rate is approx. $20 \frac{mi}{hr}$.

$t = 0.5$ sec.

$$D = rt = 20 \frac{mi}{hr} \times \frac{hr}{3600 \text{ sec}} \times \frac{5280 \text{ ft}}{mi} \times 0.5 \text{ sec} \approx 14 - 15 \text{ ft.}$$

4-7. If the earth is about 1.5×10^{11} meters from the sun, and is orbiting in essentially a circular orbit, what is the velocity of the earth in its orbit around the sun?

Answer: $v = \frac{D}{t} = \frac{2\pi \times 1.5 \times 10^{11} \text{ meters}}{3.15 \times 10^{7} \text{ seconds}} = 3 \times 10^{4}$ meters/sec.

4-8. Show that the slope of the exponential curve given below is the same at any point as the value of the curve itself at that point. Show also that one plus the area under the curve between 0 and any time t is the same as the value of the curve itself.

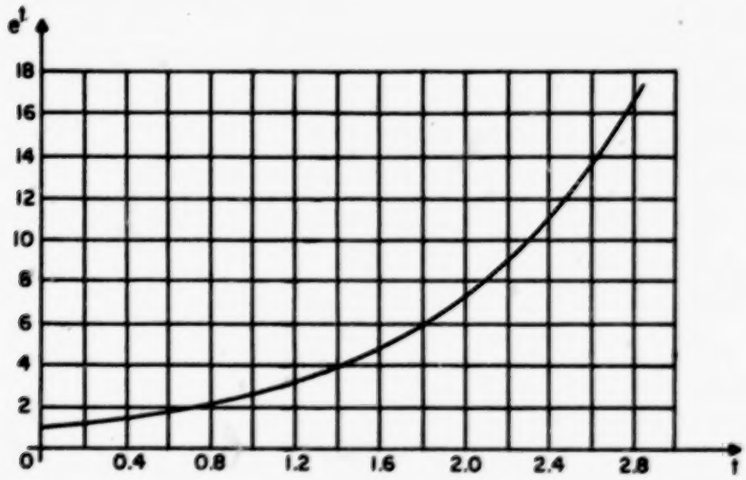

Ans. First solution requires determining slope of curve at a number of points and plotting it to get (at least approximately) a replica of the original curve. Second solution requires area determination up to one value after another of t, in each case adding 1, and noting that the result is (nearly) the same as the ordinate of the original curve at that value of t.

4-9. Plot the distance-time curve, $d = \frac{12t^2}{t+3}$ from t = 0 to t = 5 seconds, where d is in meters. Determine the slope at 1-second intervals and plot the velocity-time curve. Using this curve, determine the area under the curve in each 1-second interval and plot the resultant distance-time curve. How does it compare with the original curve?

Answers:

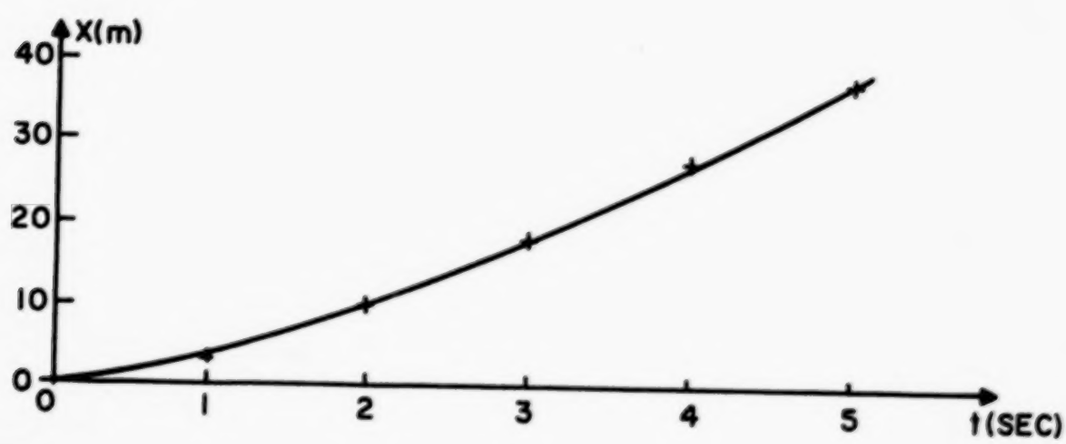

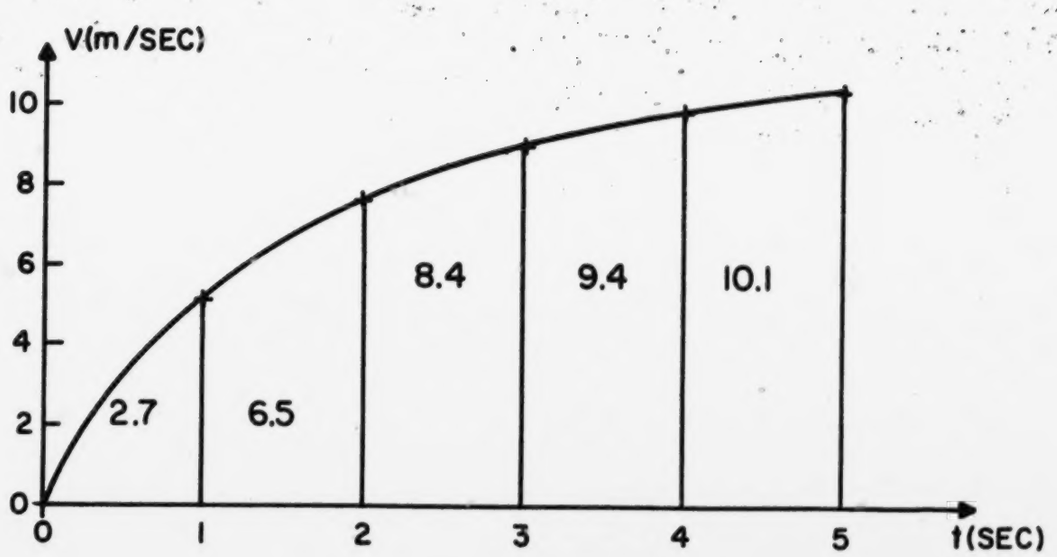

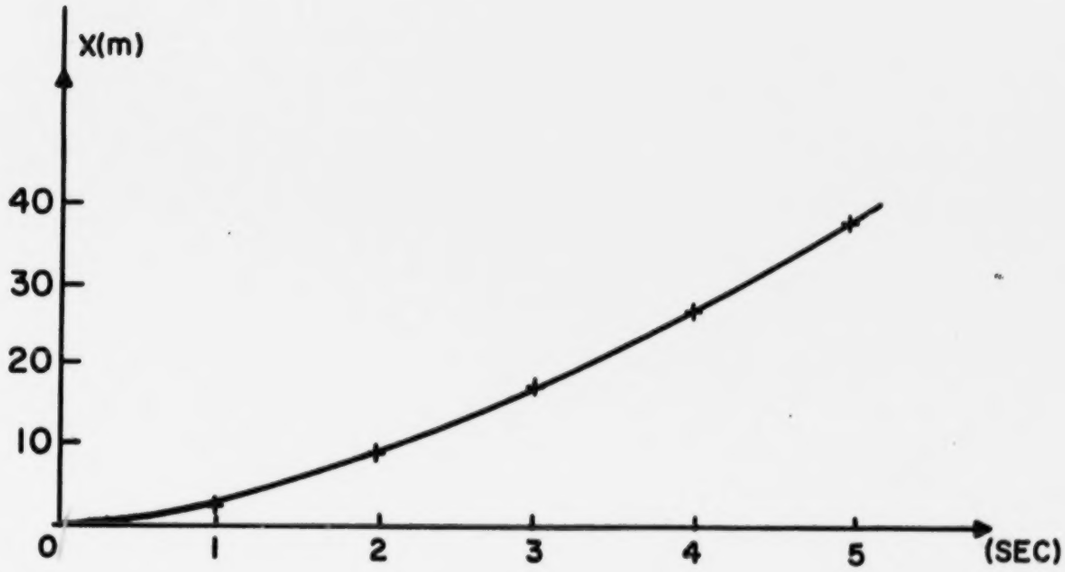

4-10. The mileposts on the Garden State Parkway start at 0 at the southern end. You have passed milepost 15 on this parkway at 12:01 P.M. Your velocity is a steady 60 miles per hour, north.

(a) At what time should you pass milepost 25? 135? 165?

(b) Which of the predictions made above is most likely to be correct?

(c) Which is least likely to be correct? Why?

Answers:

(a) 12:13; 2:01; 2:31

(b) The first

(c) The last, because it is impossible to maintain a steady velocity of 60 mi/hr for any considerable time.

4-11 A radar operator in the weather bureau at New York City is tracking an approaching storm. The following graph indicates the distance from New York with respect to time.

(a) At 1:15 P. M. he predicts the possible arrival of the storm at NYC as 3:05. On what did he base this prediction?

(b) If he made his prediction at 1:30 what would the new predicted time be?

(c) When he makes a new prediction at 2:20, what will be the new estimated time of arrival of the storm?

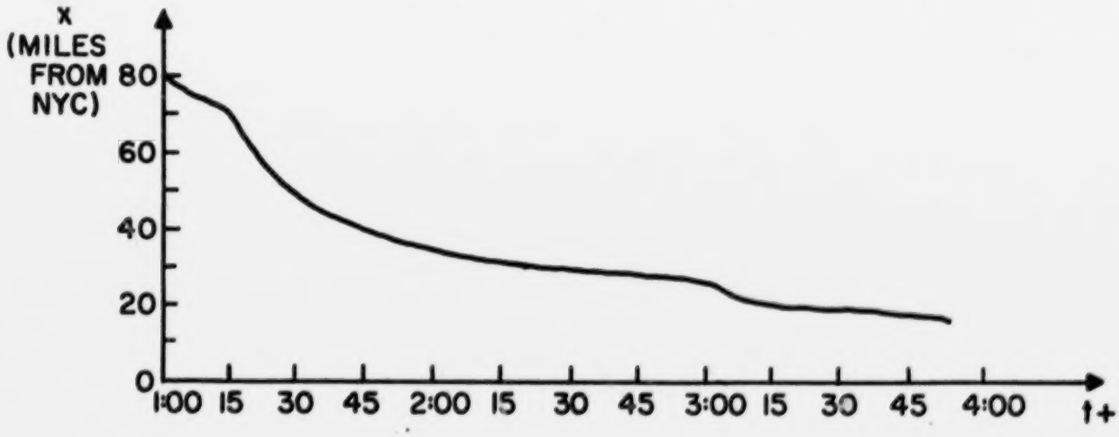

Answers:

(Note: the student may fail to realize that the radar operator has, at at any instant, only the graph from 1:00 up to the time in question).

(a) On extending a line between the positions of the storm at 1:00 and 1:10 until it intersects the abscissa.

(b) 2:15.

(c_1) 3:05 if speed is averaged from the 1 PM distance and the 2:30 PM distance.

(c_2) After 4 PM if the slope just prior to 2:30 PM is used.

4-12. An airplane landing at an airport touches down on the runway at 150 miles per hour and decreases its speed linearly to zero in a thirty-second interval. What must be the minimum runway length for the safe landing of this plane?

Answer:

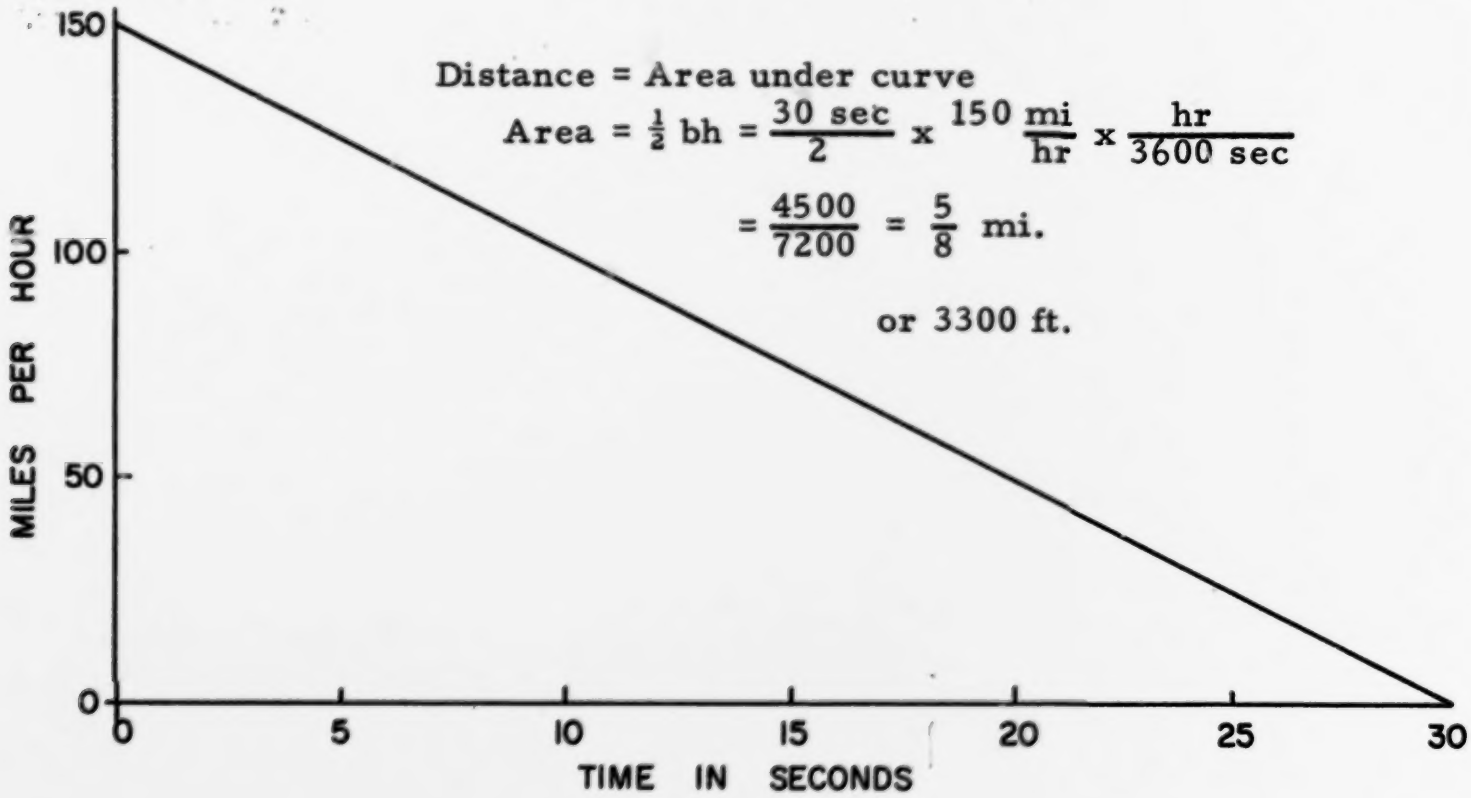

Distance = Area under curve

$$\text{Area} = \tfrac{1}{2}\,bh = \frac{30\text{ sec}}{2} \times 150\,\frac{\text{mi}}{\text{hr}} \times \frac{\text{hr}}{3600\text{ sec}}$$

$$= \frac{4500}{7200} = \frac{5}{8}\text{ mi.}$$

or 3300 ft.

4-13. An acceleration signal generated by a spaceman repeatedly opening and closing the jet valve on the gun that propels him is shown below. What do his velocity and displacement curves look like?

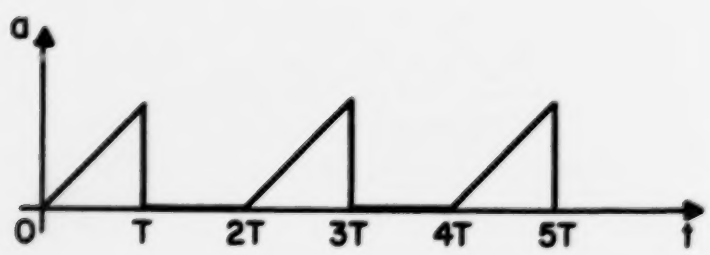

Answer:

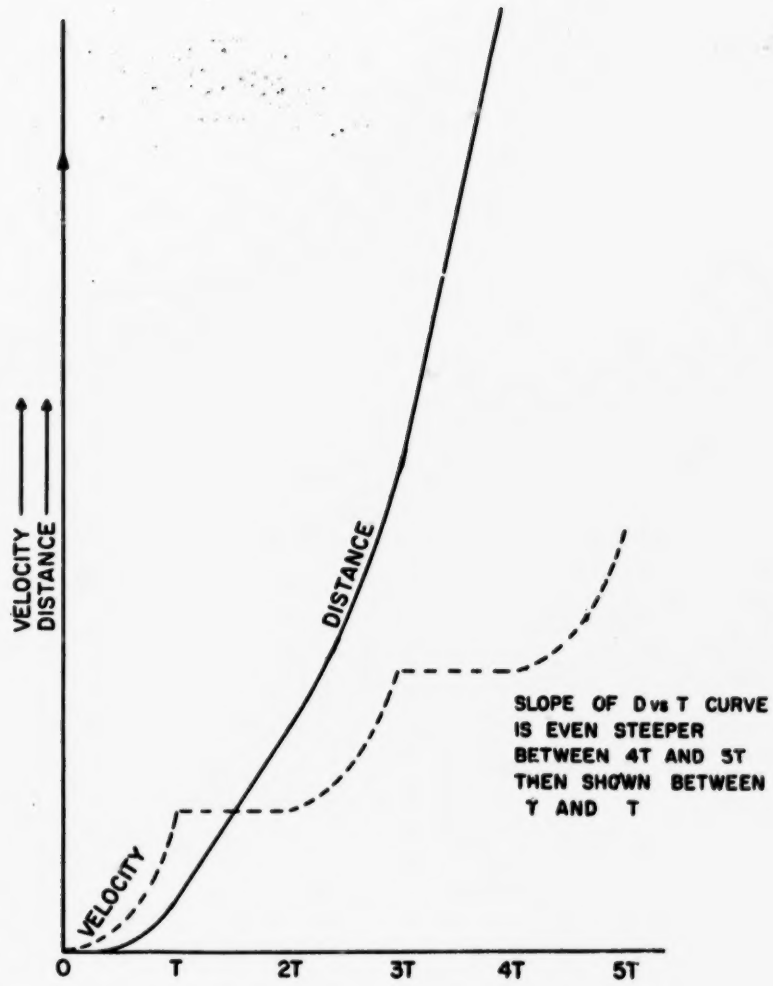

4-14. Suppose a body starts from rest with a uniform acceleration of magnitude a. Show that when the body has attained a velocity v, it will have gone a distance d that is related to v by the formula

$$d = \frac{v^2}{2a}$$

(Hint: Sketch the acceleration, velocity, and displacement curves. Derive formulas for velocity and displacement in terms of t. Eliminate t.)

Answer:

The a-graph is a horizontal straight line; hence the v-graph slopes upward to the right, again a straight line: $v = at$; and the displacement graph will be a parabola: $d = \frac{1}{2} at^2$. Then

$$d = \frac{1}{2} a \times \frac{v^2}{a^2}, \text{ etc.}$$

4-15. One important application of finding areas under curves (i.e., integration) used frequently by engineers is the determination of the average value of some signal of interest. By definition, the average value of any signal s is

$$\bar{s} = \frac{1}{t_2 - t_1} \int_{t_1}^{t_2} s \, dt$$

This equation says that the average value of s equals the area under the curve of s versus t in the interval between $t = t_1$ and t_2, divided by the length of the interval, $t_2 - t_1$. (This is a generalization of the averaging technique which you have learned in your mathematics course.)

The current in a Geiger-Mueller tube is used to monitor the level of radiation coming through the shielding around the core of a nuclear reactor. This current varies with time as shown in the table below. We wish to determine the average value of this current in order to determine the average radiation level. What is this average current? (It is advisable to plot the given data to help in the calculation.)

t(seconds)	current (microamperes)
0	66
1	80
2	76
3	78
4	80
5	71
6	59
7	50
8	53
9	55
10	52

Note: The ampere is the internationally accepted unit of current. A microampere is one millionth of an ampere.

Answer:

Approx. 66 microamperes.

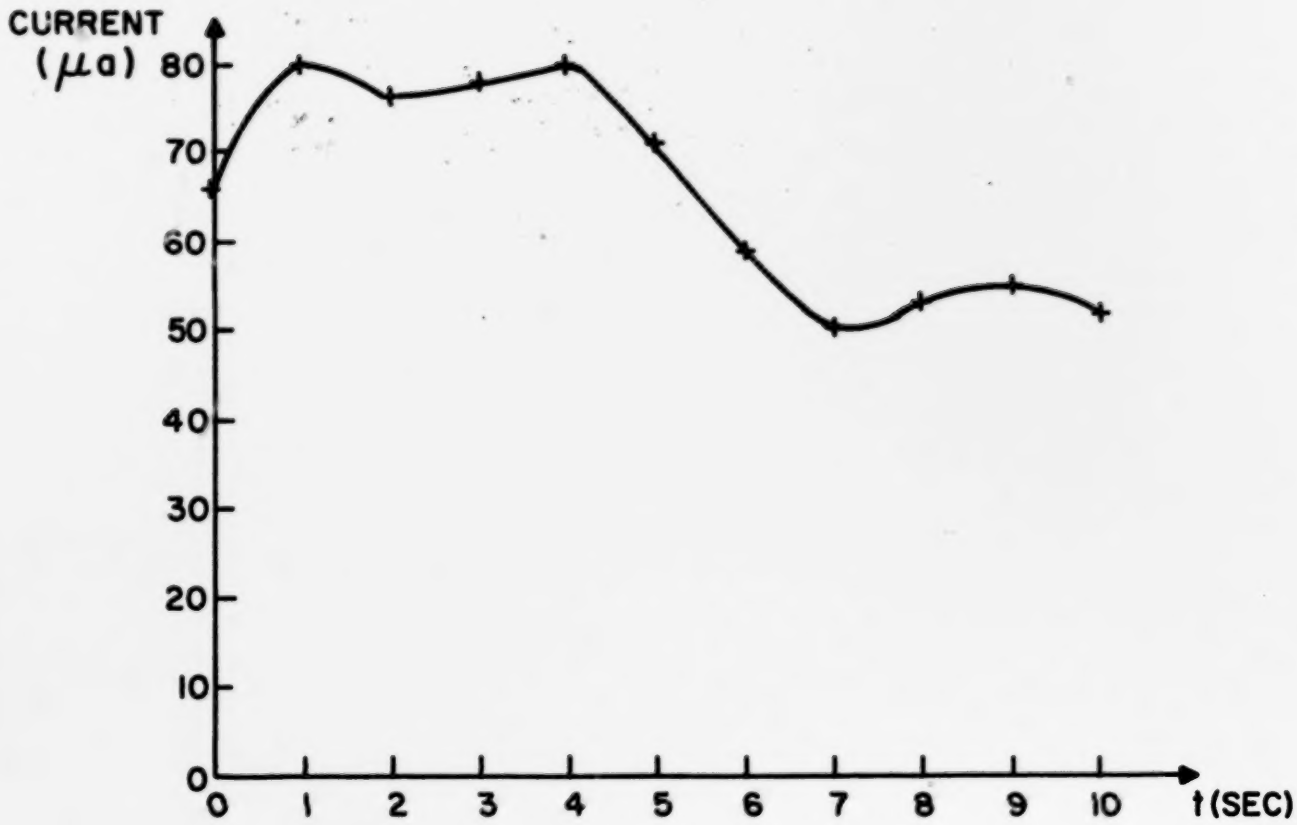

4-16. Just before touchdown a plane is moving at 160 mi/hr. The plane uses 1.5 miles of runway to stop.

(a) How many seconds does it take to stop the plane? (Assume uniform acceleration).

(b) What is the average acceleration in mi/hr sec. or ft/sec^2 of the plane? (See problem 4-15 for definition of "average".)

Answer:

(a) Area under curve = 1.5 miles.

$$\text{Average speed} = \frac{(160 + 0)\ \text{mi/hr.}}{2} = 80\ \text{mi/hr.}$$

$$D = vt;\ t = \frac{D}{v} = 1.5\ \text{mi} \times \frac{\text{hr}}{80\ \text{mi}} \times \frac{3600\ \text{sec}}{\text{hr}} = 67.5\ \text{sec.}$$

(b) $$\text{Acceleration} = \frac{v_2 - v_1}{t_2 - t_1} = \frac{0 - 160}{67.5 - 0} = \frac{-160\ \text{mi/hr}}{6.75\ \text{sec}}$$

$$= -2.37\ \text{mi/hr sec.}$$

$$\text{OR } -2.37\ \frac{\text{mi}}{\text{hr. sec}} \times \frac{\text{hr}}{3600\ \text{sec}} \times \frac{5280\ \text{ft.}}{\text{mi}} = -3.47\ \frac{\text{ft}}{\text{sec}^2}.$$

4-17. A train moving across the country passes a large series of telegraph poles, equally spaced 30 meters apart. A passenger on the train amuses himself by determining the average number of poles he passes at 15 minute intervals. The table displays his observations.

Time	Average number of poles passed
10.00	1.0 poles per second
10.15	1.3 "
10.30	1.1 "
10.45	1.0 "
11.00	1.2 "
11.15	1.4 "
11.30	1.2 "
11.45	1.0 "

(a) Calculate and graph his average velocity at each instant of observation.

(b) What was the maximum acceleration achieved by the train?

(c) From the velocity versus time graph, determine how far the train moved between 10:15 and 11:00 A. M.

(d) What was the average velocity of the train in km/hr between 10:00 A.M. and 11:00 A.M.?

Answers:

(a)

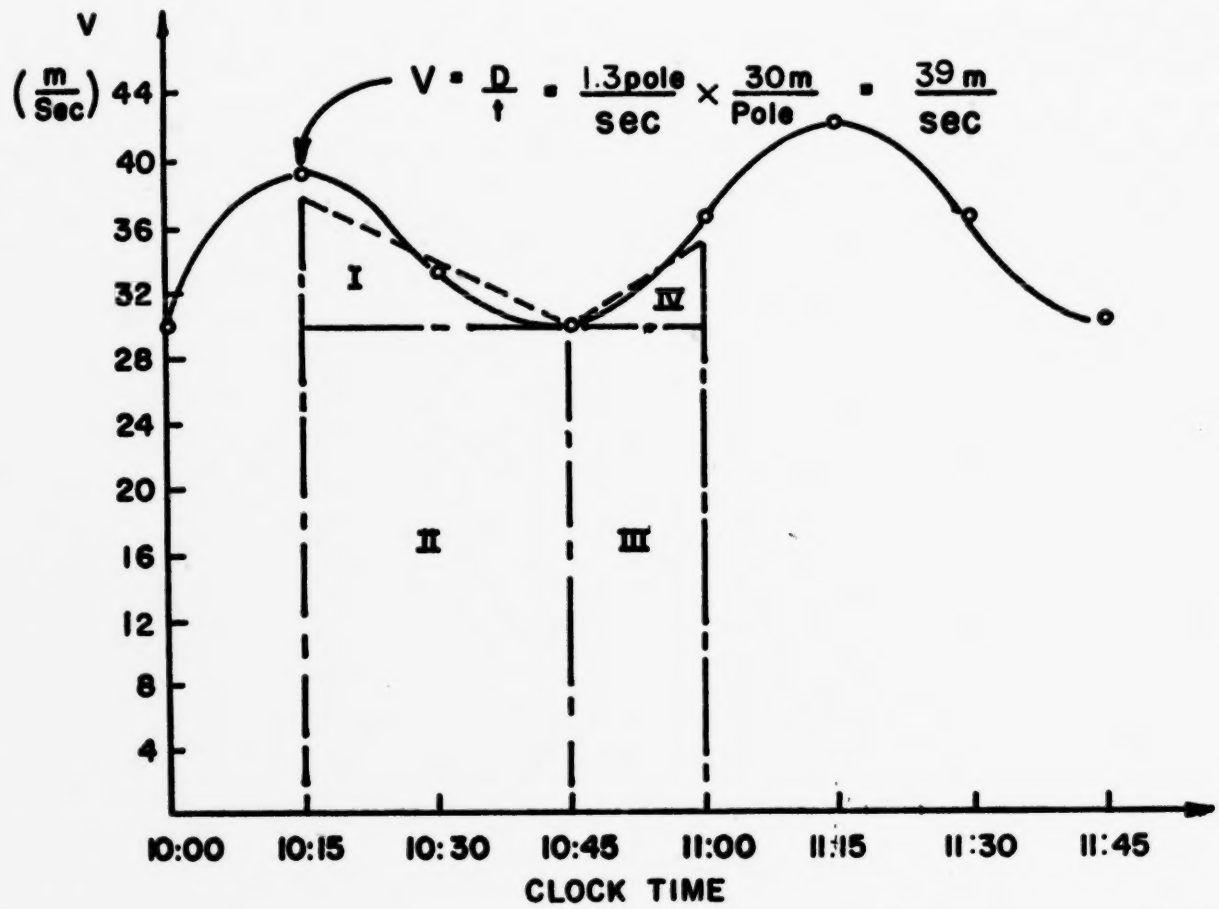

(b) $a = \frac{\Delta v}{\Delta t} = \frac{36 - 30}{5 - 0} = \frac{6m}{5\ min} \times \frac{min}{60\ sec} = \frac{1}{50} = 0.02\ \frac{m}{sec^2}$

between 10:00 and 10:05 (the steepest slope).

(c) Displacement is area of v - t curve

I $\frac{8m}{sec} \times \frac{30\ min}{2} \times 60\ \frac{sec}{min} = 7200\ m$

II $30 \times 30 \times 60 = 54000$

III $30 \times 15 \times 60 = 27000$

IV $\frac{5 \times 15 \times 60}{2} = \frac{2250}{90,450}$ m or 90 km.

(d) Average velocity is approximately $34\ \frac{m}{sec}$

$34\ \frac{m}{sec} \times \frac{km}{1000\ m} \times \frac{3600\ sec}{hr} \approx 123\ \frac{km}{hr}$.

4-18. A baseball moving at 60 feet per second toward a batter is hit in such a way by the batter that after the hit it is moving at 80 feet per second in the opposite direction. The bat-ball interaction time is about 2×10^{-2} seconds.

(a) What was the change in the velocity of the ball?

(b) What was the average acceleration of the ball in ft/sec^2?

(c) If the acceleration was constant, what was the ball's velocity 1.0×10^{-2} seconds after the interaction started?

(d) After the hit, how long would it take the ball to travel back to the pitcher's mound? (60.5 feet)

Answers:

(a) Assume negative away from the batter and positive toward the batter. Change in velocity = -80-(+60) = $-140\ \frac{ft}{sec}$.

(b) Average acceleration = $-140\ \frac{ft}{sec} \times \frac{1}{0.02\ sec} = -7000\ \frac{ft}{sec^2}$.

(c) $v = v_o + at = 60 + (-7000)(.01)$

$= 60 - 70 = -10\ \frac{ft}{sec}$.

(d) $t = \frac{D}{r} = \frac{60.5\ ft}{80\ ft/sec} = 0.75$ sec.

4-19. Assume that all of the turnstiles in a ballpark have counters which are connected to a central device which gives a reading of p, the number of people per minute entering the park. At noon the reading is zero when the gates are opened. The value of p increases linearly (i.e., as a straight line) from zero to 400 people per minute in the first half-hour, remains at 400 for one-half hour, and then drops linearly to zero by 2:00 P.M., thirty minutes after the game has started. (a) What was the total

attendance? (b) How many people missed the start of the game?

Answers:

(a) Attendance - Area under p-t curve

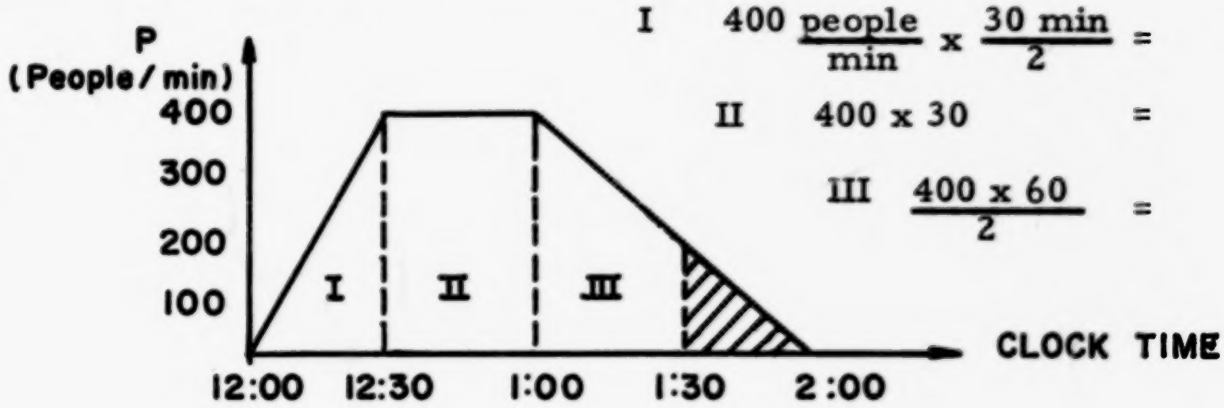

I $400 \frac{\text{people}}{\text{min}} \times \frac{30 \text{ min}}{2} = 6000$

II $400 \times 30 = 12000$

III $\frac{400 \times 60}{2} = 12000$

$30,000$ people

(b) Area = $\frac{1}{2}$ bh = $200 \frac{\text{people}}{\text{min}} \times \frac{30 \text{ min}}{2} = 3000$ people
(Shaded)

4-20. In June of 1966, Surveyor I landed softly on the surface of Earth's moon and began taking a historic series of photographs. The velocity of Surveyor, as it approached the lunar surface, was telemetered to tracking stations on Earth. This velocity varied as shown in the figure below. The main retrorocket fired at an instant we have defined as t = o. At this time, Surveyor was 52 miles above the lunar surface. (a) What was its altitude when the main retrorocket burned out (at t = 30 seconds)? (b) What was its altitude at t = 50 seconds?

Answers:

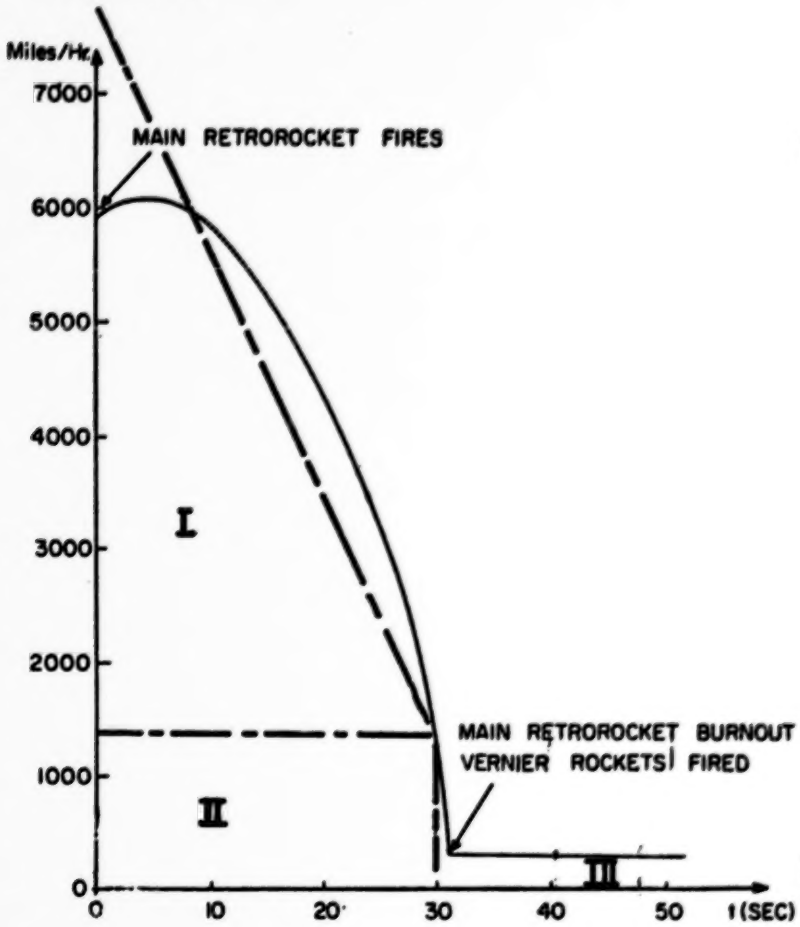

(a) Distance = Area under v-t curve

Area I $\frac{(8000-1400)}{2} \frac{\text{mi}}{\text{hr}} \times \frac{\text{hr}}{3600 \text{ sec}} \times 30 \text{ sec}$

$\frac{6600 \times 30}{2 \times 3600} \approx 28$

Area II $\frac{1400 \times 30}{3600} \approx 11.7$

39.7 mi

Altitude at burn out of main rockets

$= 52 - 39.7 \approx 12$ mi

(b) Area III $\frac{300 \times 20}{3600} \approx 1.7$ mi

Altitude at burn out of vernier rockets

$12 - 2 \approx 10$ mi

4-21. Dix Hills, New York, stores water for its residents in a large elevated storage tank. Water is poured into the tank from underground wells to replenish the supply as it is used. This added water flows in at a rate q_1. The residents drain off water from the tank at a rate q_2. If q_1 and q_2 (in gallons per hour) vary as shown in the figure, determine the volume of water in the tank at 10 P. M. if the volume at noon (i. e., the initial volume) is 16,000 gallons.

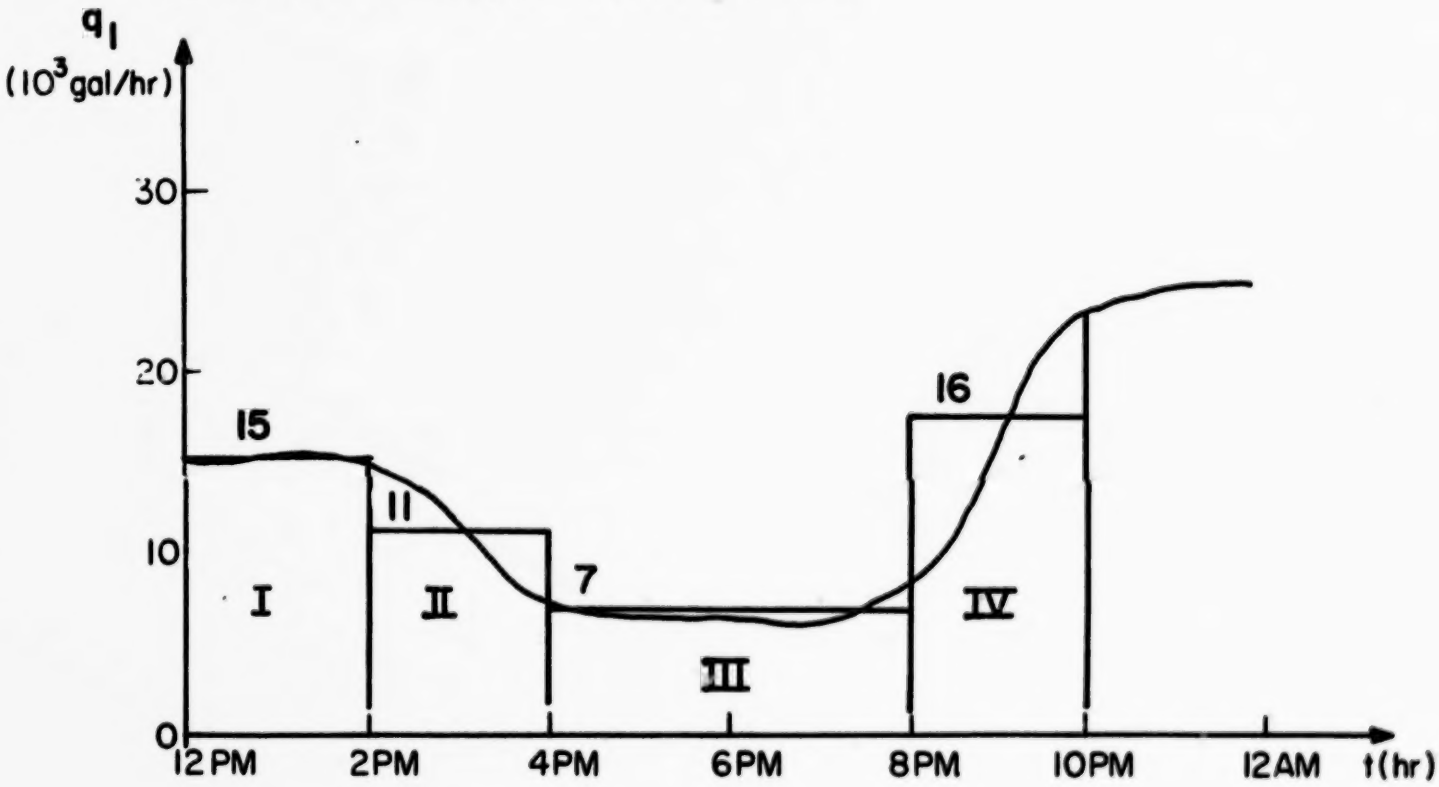

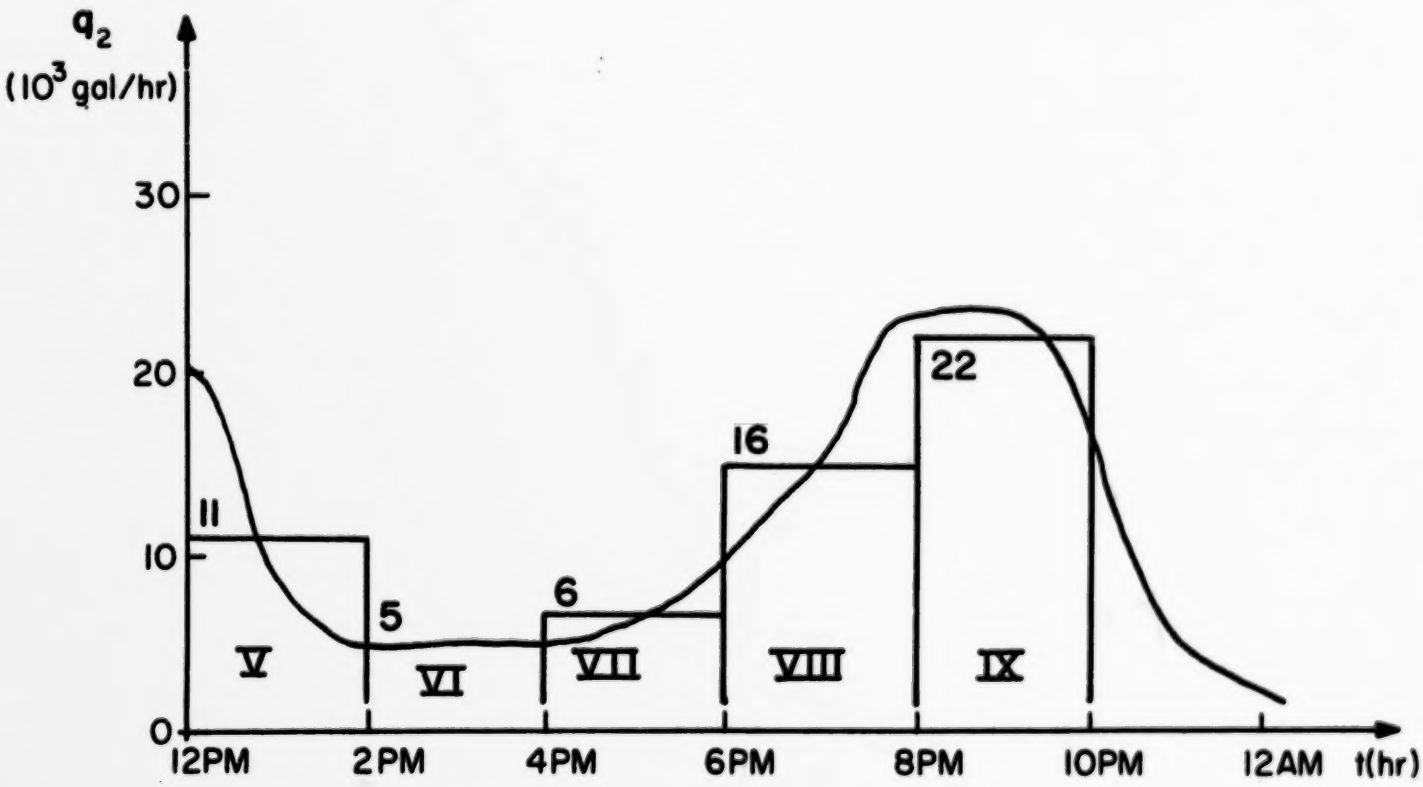

Answer: Quantity of water stored at 10:00 PM is area under q_1, t curve minus area under q_2, t curve plus 16,000 Gallons

Area I	$15,000 \frac{gal}{hr} \times 2$ hrs	=	30,000
II	11 x 2 =		22,000
III	7 x 4 =		28,000
IV	16 x 2 =		32,000
Total water into storage			112,000 Gal.
V	11 x 2 =		22,000
VI	5 x 2 =		10,000
VII	6 x 2 =		12,000
VIII	16 x 2 =		32,000
IX	22 x 2 =		44,000
			120,000

Quantity of water stored at 10:00 PM
112,000 - 120,000 + 16,000 = 8,000 Gal.

4-22. Shown in the figure is a velocity curve that represents the motion of many physical systems, some being the motion of a pendulum, the swaying of a bridge, and the movement of electronic charges in the lamp on your desk. Determine the displacement and acceleration curves associated with this velocity curve. What is the most significant comment you can make regarding your results?

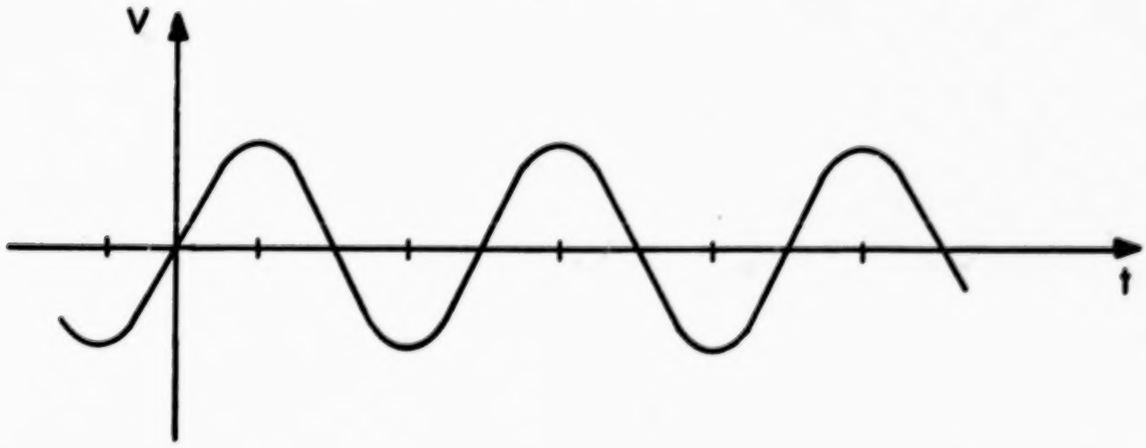

Answer:

All three curves are the same shape. The displacement curve is shifted 90° (or $\frac{1}{4}$ wave length) to the right (note that initial displacement is negative because of the part of the curve to the left of the v-axis); the acceleration curve is shifted 90° to the left. Of course there is no particular relationship among the amplitudes of the three curves, because they are plotted with different ordinate scales.

V. Development

1. Introduction

A brief discussion of rate of change with respect to time as related to models of moving systems will be sufficient here. The basis for developing models that undergo change in motion rather than static models should be brought out and discussed.

2. Signals, Inputs and Outputs

Emphasize that signals are the numerical values of an input or an output. Refer the student to the references listed, namely: the table, the graph, the equation. Many signal data change with time. In this chapter we specialize in the signals of velocity and acceleration. Emphasize that they are signals of motion and will be modeled by use of the analog computer.

3. Signals of Motion

Although the signal of position is a complicated one (six are required for a car), we concern ourselves with the simplest situation, displacement in one direction. The reference of the signal value refers to the point at which the signal is zero, and the positive sign indicates a direction to the right (East) or up (North). We call this displacement signal "x" even though it will be plotted along the vertical axis (usually Y in graphing!)

When the signal "x" varies with time, we have a model of velocity. The displacement signal in Fig. 3 also describes the velocity of the body: its speed and also the direction in which it is moving. Students should be asked to indicate (read) from the graph how rapidly and in what direction the displacement signal is changing. Sketch quickly on the board several other curves for them to practice on.

Fig. 4 should be discussed and developed carefully with several examples of the determination of velocity. The velocity is the slope of the straight line and represents (for example) a car moving along in a fixed direction at a constant speed.

Fig. 5 is an example of a displacement that changes smoothly but at a varying rate. Here the concept of change in x (Δx) and change in t (Δt) is used in the construction of the tangent to the curve and the slope of this tangent at any instant of time is the instantaneous velocity. From any graph of displacement versus time we can determine all of the instantaneous velocities and draw the velocity versus time graph. We can now take this v, t graph and by using small intervals of time, we can calculate the change in displacement, add these to the original displacement and determine the new position of the moving object. The teacher may want to explain that the first process is differentiation, the second integration. In the second process we reverse the first and find the displacement-time curve from the velocity-time curve. The smaller the time interval, the more accurate the representation.

Acceleration can be found by finding the slope of the tangent of the velocity versus time graph at any instant of time. This is the instantaneous acceleration and acceleration is related to velocity in the same way that velocity is related to displacement. "Deceleration" is sometimes used when a body is slowing down but negative acceleration is more appropriate. In the Man-Made World, the application and understanding of acceleration is a very important concept because the acceleration of a body is directly pro-

portional to the force acting on the body.

In summary, knowing the displacement versus time curve we also know velocity and acceleration and we have developed the relationship between displacement, velocity and acceleration ($x \rightarrow v \rightarrow a$)! The seeds are sown for finding the reverse process in the next section.

4. The Relation: $a \rightarrow v \rightarrow x$

Figure 11 shows the obvious fact that the area under the velocity-time graph will give the displacement. When the velocity-time graph is not at a constant velocity and the velocity curve is irregular, an approximation of the curve is developed where rectangles and triangles are drawn to closely resemble the curve. With more and narrower rectangles we can approximate more closely the true area to get the displacement. The summing symbol $\sum$ is introduced again to signify the sum of the individual areas. The teacher may remind the class that this is integration and is the practical tie-in with the analog computer. (It is left to the discretion and ability of each teacher to develop fully or simply explain the process of integration and the statement, "the integral of velocity with respect to time is the displacement").

In many examples, there may be an initial displacement which must be added to computed area to find the total displacement. The acid flow example is analogous to the initial displacement problem. In the acid problem the initial volume of acid is added to the area under the quantity (gallons/hr) versus time curve to find the total volume of acid produced.

Velocity may be found by determining the area under the acceleration versus time curve just as displacement was found from the velocity-time curve. Thus we have established that the Displacement $\longleftrightarrow$ Velocity $\longleftrightarrow$ Acceleration transition is complete.

5. A Model of Motion

Before deriving a model of a system, the operation of the system must be understood. The simple motion system is developed using acceleration as the input signal and getting displacement as the output signal. The concept of a scalor is introduced as the scaling coefficient and is necessary to simulate (model) the system. The acceleration is related to the position of the accelerator pedal and corresponds to the input signal. Put the input signal into the scalor and its output into an integrator (area-finder) to find the velocity and this signal into another integrator (2nd area-finder) to find the displacement.

6. The Analog Computer

Once the model has been developed as in the previous section, a functional model using the analog computer follows directly. The inputs and outputs must be analogous to those of the system under study. All that remains to complete the picture is to introduce the initial conditions of velocity and displacement if given in the problem. Emphasize that time affects the output signal from moment to moment exactly as velocity or displacement changes in a real vehicle. All that remains is to program the computer. The inputs may be varied and different systems may be operated rapidly without building the real system.

7. Summary

The summary includes a review of the key words and their interrelationships. Emphasize that the one model (the analog computer) may apply to many systems.

VI. Laboratory Experiments and Placement

There are twelve laboratory experiments pertaining to this chapter, all involving the Polylab, the Analog Computer, or the CRO. It is left to the discretion of the teacher and his individual schedule and laboratory situation to place the laboratory experiments to suit his individual needs. Experiment XX can be done whenever convenient before XXIV. XXVI should precede XXIV and XXV. When you run over the Lab Manual you will see that XV through XXII are concerned merely with using the hardware. The detailed directions have value as a reference manual, but it will deaden the interest of most students to plod through them completely. A better plan is to show what controls are for, mention the chief precautions (e.g., not grounding "hot" outputs, not losing the CRO trace completely by random twisting of the H POS and V POS controls), and let them experiment until they feel happy with the instruments. Suggest that the last four experiments are pretty fascinating, and the goal is to be able to manage them as soon, and as painlessly, as possible. The laboratory experiments are as follows:

Expt. #	Expt. Name
XV	Introduction to Polylab
XVI	Familiarization with the EVM
XVII	Introduction to the Analog Computer
XVIII	Scaling on the Analog Computer
XIX	Adding on the Analog Computer
XX	Analog Solution to Equations
XXI	Integrating on the Analog Computer
XXII	Integrating with Initial Conditions
XXIII	The Cathode Ray Oscilloscope
XXIV	Analog Simulation of Falling Ball
XXV	Simulation of Falling Ball with Air Resistance
XXVI	Boat Docking Simulation

VII. Transparencies
TB-4.3a Fig. 4

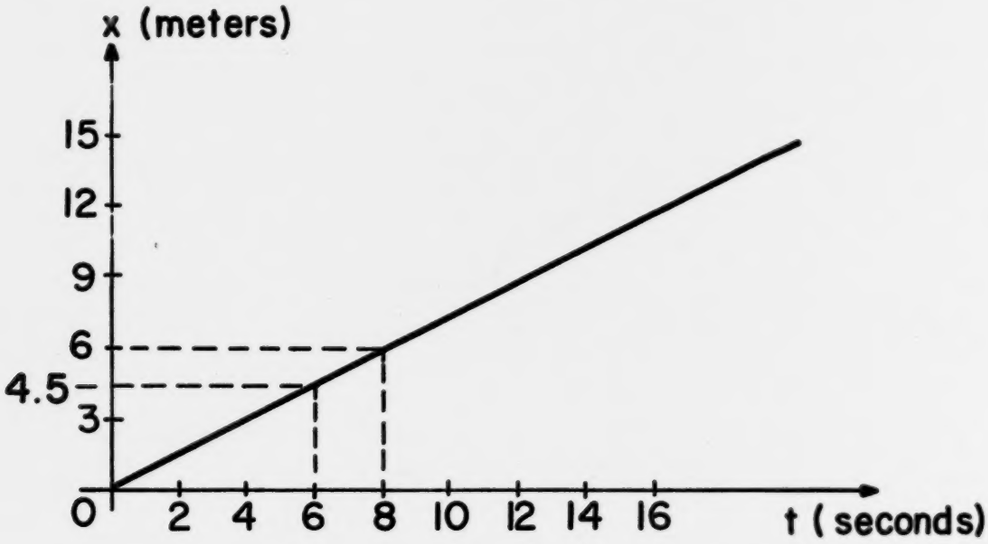

Fig. 4. A displacement signal when velocity is constant.

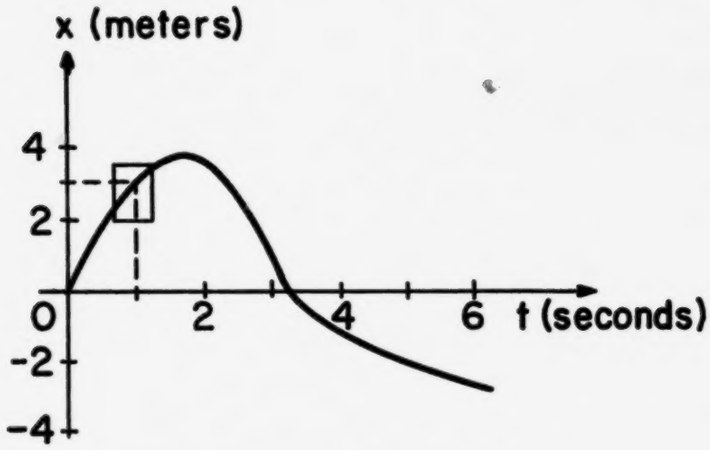

Fig. 5. An example of a displacement signal which varies smoothly at a varying rate.

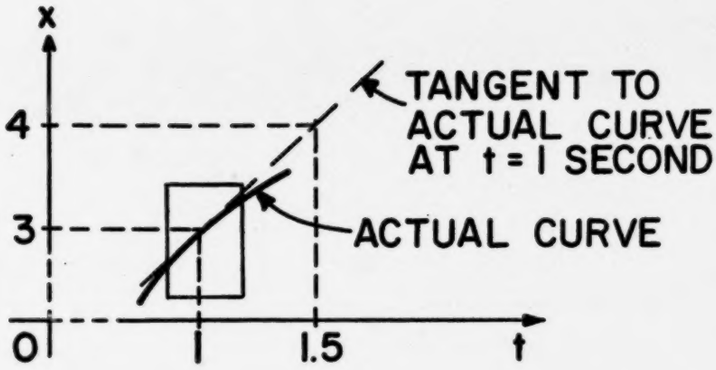

Fig. 6. Magnified portion of x vs t graph near t = 1 second.

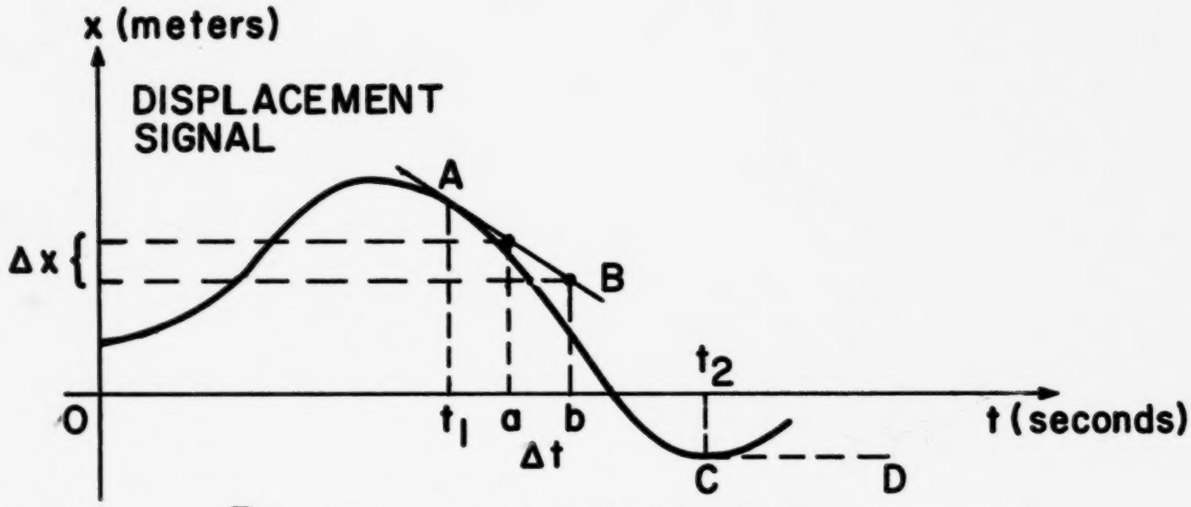

Fig. 7. Determination of velocity.

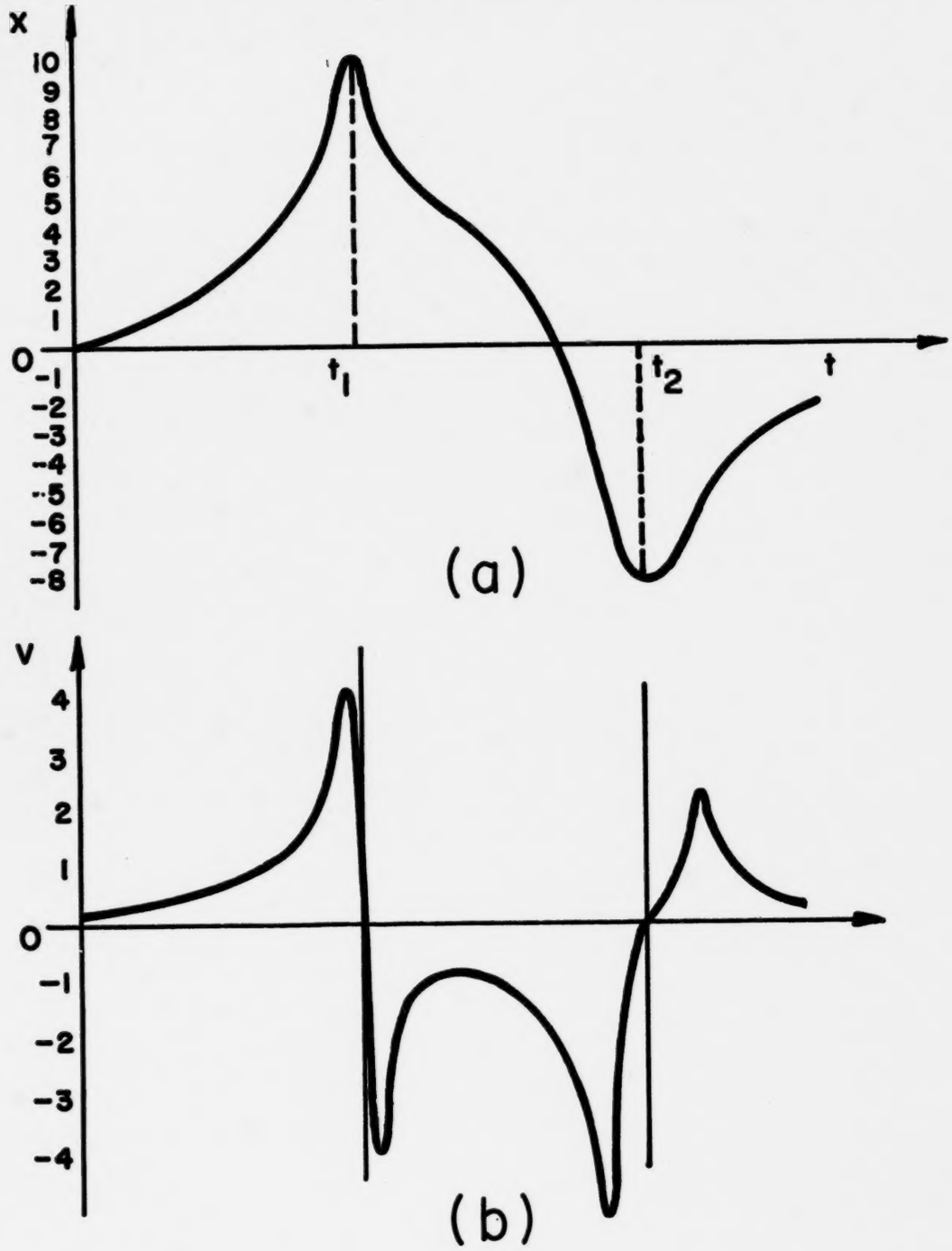

Fig. 8 Displacement signal (a) and corresponding velocity (b).

TB-4.4a

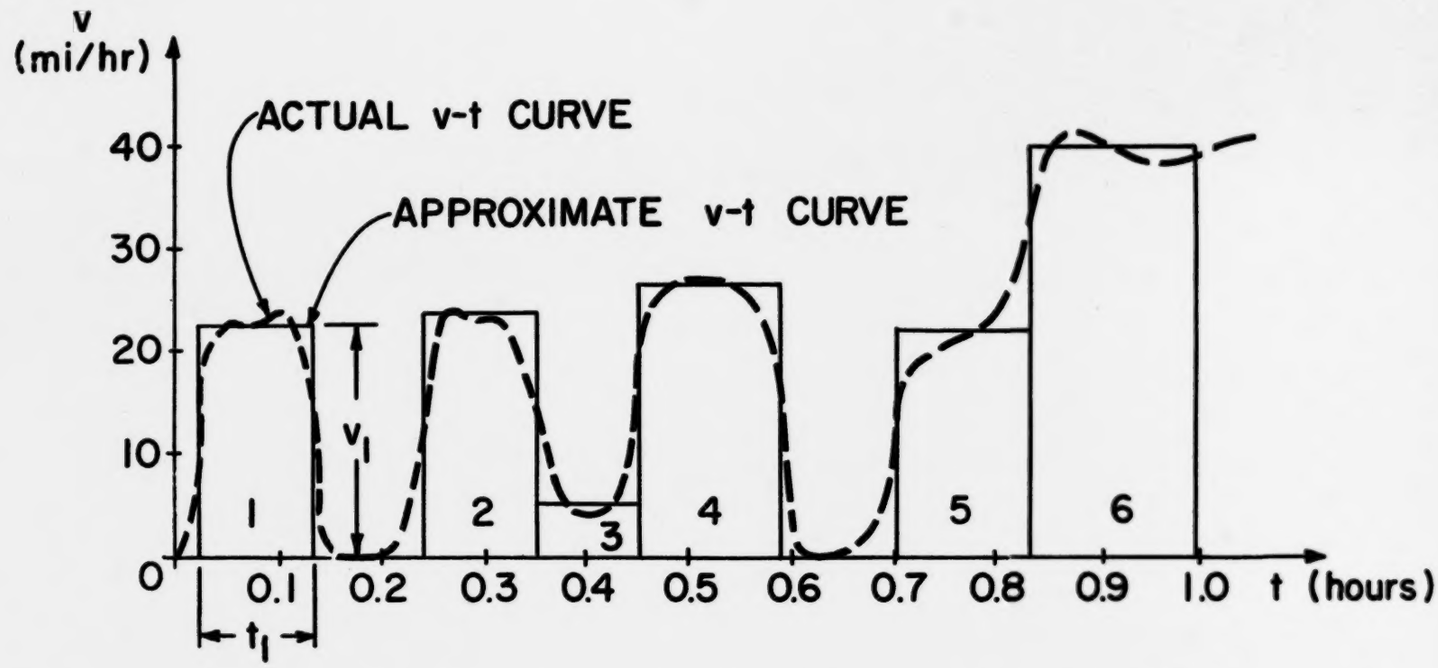

Fig. 13. Approximation to actual v, t curve of Fig. B-2.12.

TB-4.4b

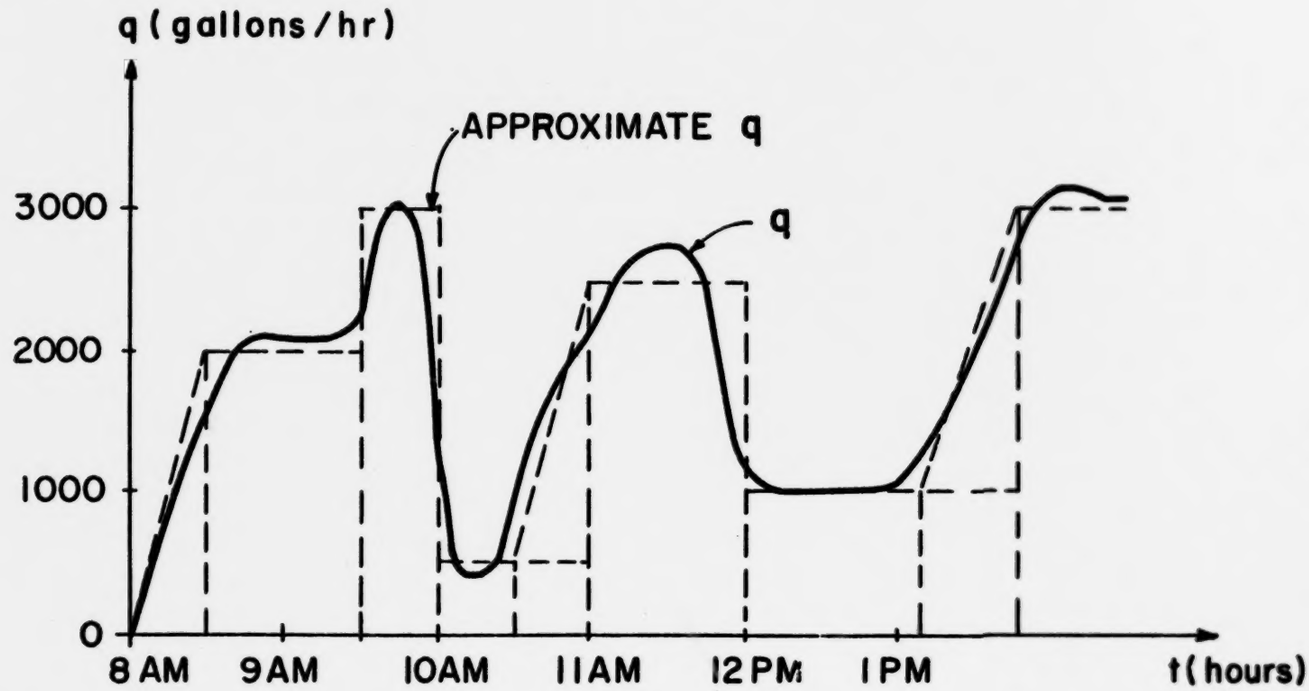

Fig. 16. Rate of flow of acid into tank of Fig. B-2.15 on a typical day.

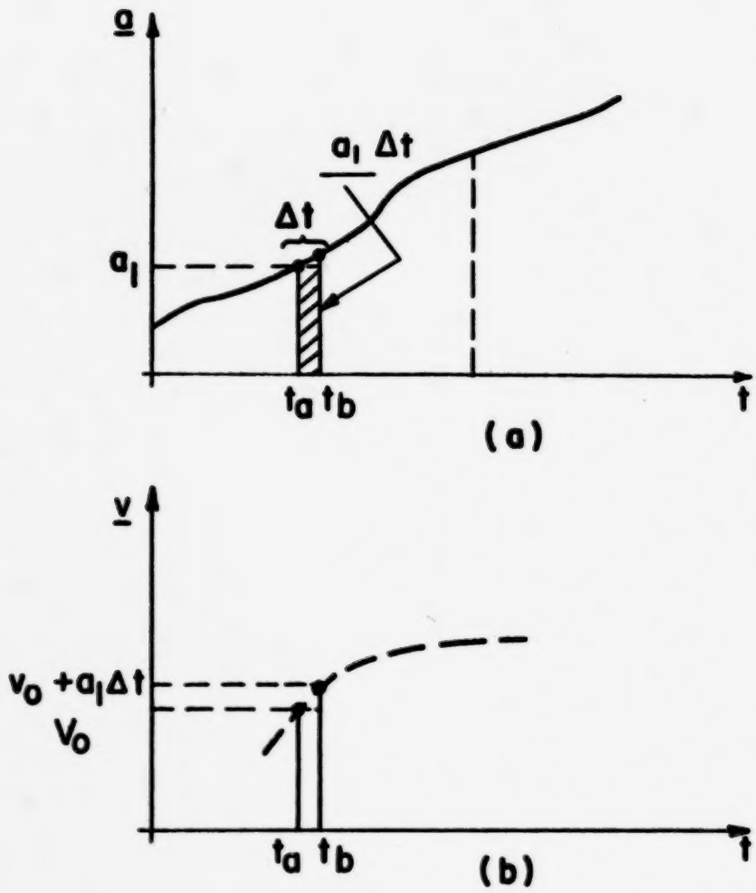

Fig. 17. Conversion of a-t into v-t graphs.

VIII. Quiz, Test & Discussion Questions

A. Quiz Questions and answers (Text section in parentheses):

1. (1) Give two examples not mentioned in the text up to this point of dynamic situations.

Answer:

For example: flow of water over a dam spillway; winds; weather in general; alternating current; waves.

2. (1) A coiled spring which is fastened to the ceiling and stretched by pulling the other end can be described by a mathematical model: $F = -kx$, where x is the increase in length of the spring, k is a constant (different however, in general, for different springs), and F is the force exerted by the spring. The negative sign merely shows that if the spring is stretched downward it exerts a force upward. Is this a dynamic model? Defend your answer.

Answer:

There will be a change in the increased length of the spring if there is a change in the amount by which it is pulled; but this will always be true no matter when the experiment is performed, there is no need to make adjustments for the passage of time, the model is static. (For some classes teachers may care to point out that one can take the space derivative of F in this case rather than the time derivative, and in that sense this can be treated as a dynamic model.)

3. (2) What "signals" were employed in the model of the population of the world?

Answer: The population year by year; the successive years.

4. (3) A boy is bouncing a tennis ball against a wall 15 feet from him.
a) What is the displacement of the ball, with respect to the boy's position, at the instant it strikes the wall?
b) What is the displacement of the ball at the instant when he catches it again after it has bounced?
c) If the boy catches the ball exactly 1 sec after throwing it, what was the average speed of the ball?

Answers: a) + 15 ft; b) 0 ft; c) 30 ft/sec.

5. (3) In the previous problem, what was:
a) the average velocity of the ball between the thrower and the wall?
b) its average velocity during its return from the wall to the boy?
c) its average velocity during the round trip?

Answers: a) + 30 ft/sec; b) - 30 ft/sec; c) 0 ft/sec.

6. (4) (1) In each of the cases graphed below, what is the average velocity of the moving body?

(2) Find the acceleration in each case.

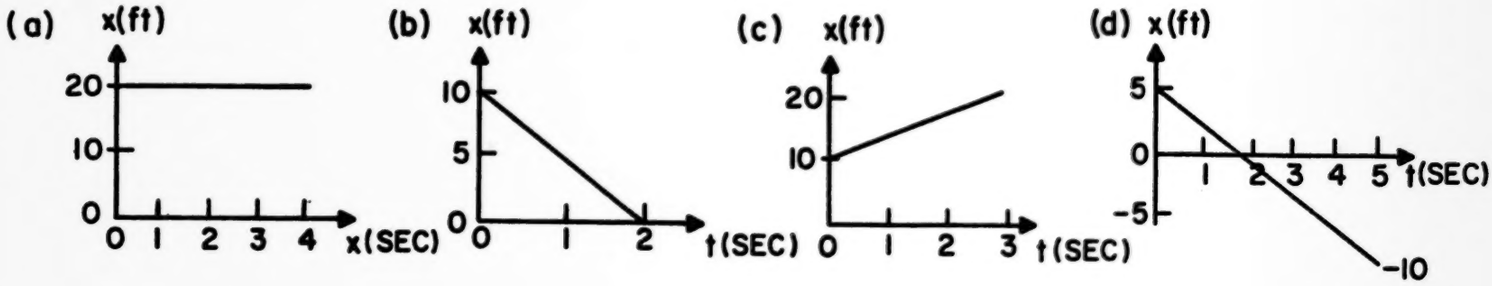

Answers:
(1): a) 0 ft/sec; b) - 5 ft/sec; c) + 3.3 ft/sec; d) - 3 ft/sec.

(2): a = 0 in every case, since in no case is there a <u>change</u> in velocity.

7. (4) The graph depicts the displacement of a body which is dropped into a denser liquid.
a) Give a qualitative description of the body's motion.
b) What is the body's velocity at the instant t_1?
c) During what interval is the velocity positive? Negative?
(Take the direction of the arrowhead on the displacement axis as positive.)

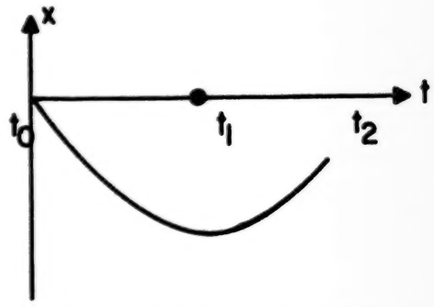

Answers:

a) The body descends deeper and deeper into the liquid, but with ever diminishing speed; comes to momentary rest; and starts back toward the surface.
b) Since the tangent is horizontal, $v_1 = 0$.
c) The velocity is positive when the slope of the curve is positive, or from t_1 to t_2; v is negative from t_o to t_1. (Of course, the instant t_1 itself is excluded from both these intervals.)

8. (4) a) Sketch a graph showing (approximately) the velocity of the body in Question 7 plotted against time.
b) Sketch a graph showing approximately the acceleration of the same body plotted against time.

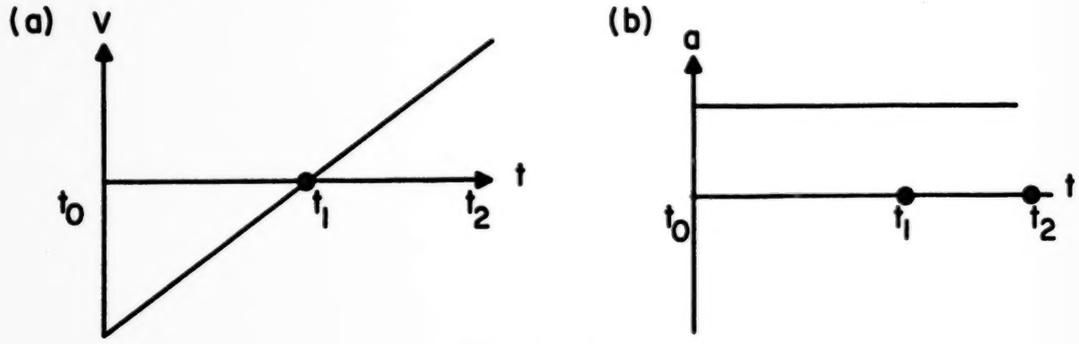

9. (4) Find the acceleration (including algebraic sign and unit of measure) in each of the following:

a) Initial velocity (v_1) = 0 mi/hr; final velocity (v_2) = 30 mi/hr: elapsed time (t) = 1/60 hr.
b) v_1 = 0 mi/hr; v_2 = 30 mi/hr; t = 1 min.
c) v_1 = 0 mi/hr; v_2 = 30 mi/hr; t = 60 sec
d) v_1 = 0 mi/hr; v_2 = 44 ft/sec (which = 30 mi/hr); t = 60 sec.

A sprinter leaves his marks with an acceleration of 50 m/sec^2.
e) What is his acceleration in m/min^2?

Answers:

a) $\frac{v_2 - v_1}{\text{time}} = (30 - 0)\frac{\text{mi}}{\text{hr}} \times \frac{60}{\text{hr}} = +1800\frac{\text{mi}}{\text{hr}^2}$

b) $(30 - 0)\frac{\text{mi}}{\text{hr}} \times \frac{1}{1\text{ min}} = +30\frac{\text{mi}}{\text{hr min}}$

c) $(30 - 0)\frac{\text{mi}}{\text{hr}} \times \frac{1}{60\text{ sec}} = +0.5\frac{\text{mi}}{\text{hr sec}}$

d) $(44 - 0)\frac{\text{ft}}{\text{sec}} \times \frac{1}{60\text{ sec}} = 0.733\frac{\text{ft}}{\text{sec}^2}$

e) $\frac{50\text{ m}}{\text{sec}^2} \times \frac{3600\text{ sec}^2}{\text{min}^2} = 1.80 \times 10^5\frac{\text{m}}{\text{min}^2}$

10. (5) The speed at which an automobile is moving is indicated by its speedometer. What instrument indicates to the driver the distance through which his car has traveled, thus saving him the difficult and time-consuming procedure of finding the area under the v, t curve? In other words, what instrument located on the dashboard carries out the integration of automobile velocity?

Answer: The odometer or mileage indicator.

11. (4) a) What was the acceleration of the body whose motion is represented by this graph?
b) Determine the distance covered in <u>each</u> successive second.
c) Find how far the body went in 2 sec; in 3 sec; in 4 sec.
d) Plot a graph of displacement against time for this case.
Do you know the name of the curve you have drawn?

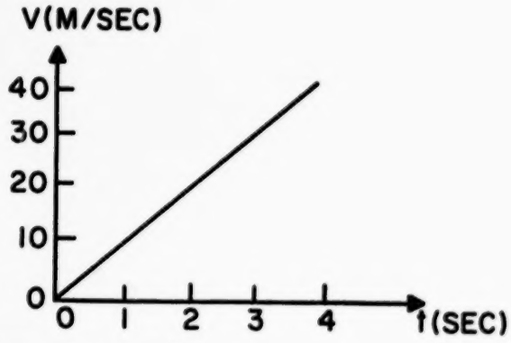

Answers:

(a) Acceleration is the slope of the v-t graph.

$$a = \frac{\Delta v}{\Delta t} = \frac{40 - 0}{4 - 0} = +10 \frac{m}{sec^2}$$

(b) Displacement is the area of the v-t graph.

$$\text{Area} = 10 \frac{m}{sec} \times \frac{1 \text{ sec}}{2} = 5 \text{ m} \quad \text{in first second.}$$

Area = 10 + 5 = 15 m in second second.

Area = 20 + 5 = 25 m in third second.

Area = 30 + 5 = 35 m in fourth second.

(c) Distance covered is sum of the above displacements:

5 + 15 = 20 m in 2 seconds.

5 + 15 + 25 = 45 m in 3 seconds.

5 + 15 + 25 + 35 = 80 m in 4 seconds.

d) The curve is a parabola (part of one arm):

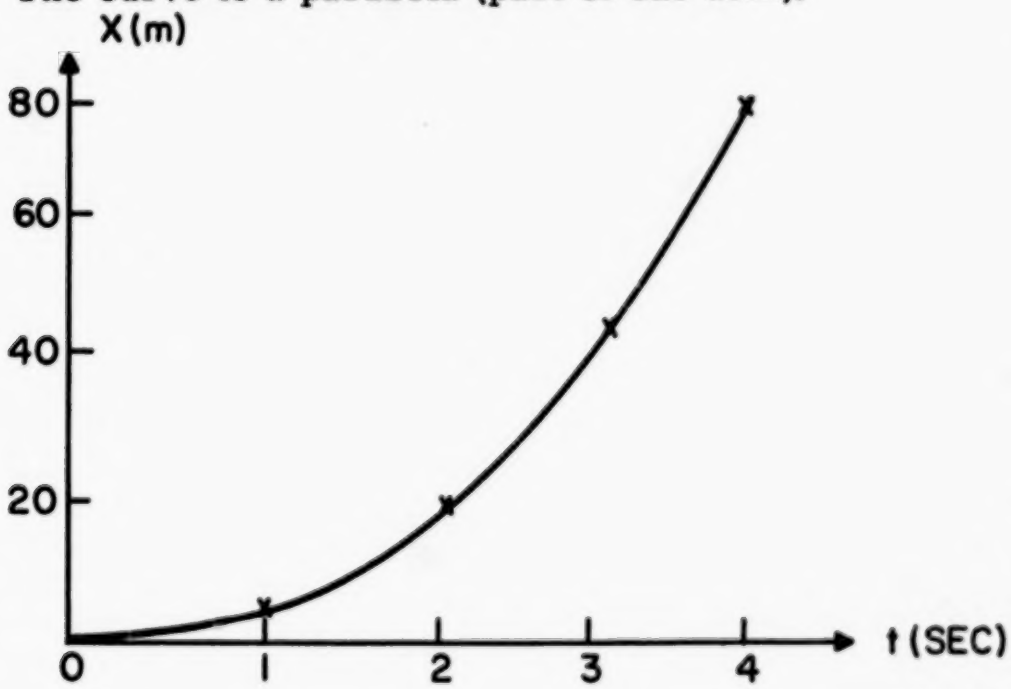

12. (4) a) What was the acceleration of the body whose motion is represented in this graph?
b) What was the displacement between t = 0 and t = 2 sec?
c) What was the displacement between t = 0 and t = 3 sec?

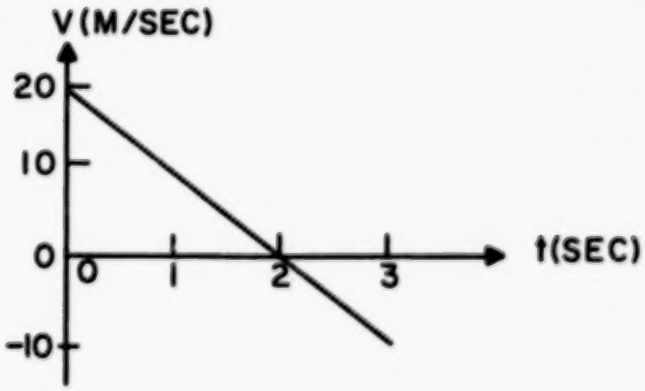

Answers:

(a) Acceleration is the slope of the v-t graph.

$$a = \frac{\Delta v}{\Delta t} = \frac{0 - 20}{2 - 0} = -10 \frac{m}{sec^2} \text{ (negative slope)}$$

(b) Displacement is the area of the v-t graph

$$\text{Area} = 20 \frac{m}{sec} \times \frac{2 \text{ sec}}{2} = +20 \text{ m.}$$

(c) $$\text{Area} = \frac{20 \times 2}{2} - \frac{10 \times 1}{2} = 20 - 5 = +15 \text{ m.}$$

(Area below t-axis or negative velocity is negative displacement)

13. (5) The proprietor of a village candy store found that his sales of lollipops in the week of September 10 were as follows:

Monday:	12	Thursday:	18
Tuesday:	10	Friday:	28
Wednesday:	12	Saturday:	42

a) Plot these points on a suitable graph, labeling the axes.
b) Is it proper, in this case, to connect the points with a smooth curve? Explain why or why not.
c) Does the area under such a curve give the magnitude of his total sales for the week?

Answers:

a)

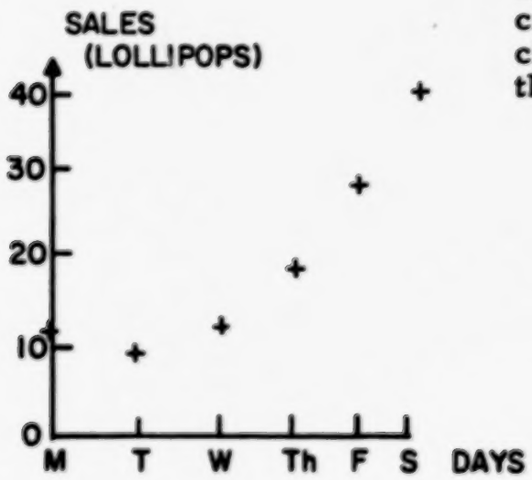

b) No: this is a record of discrete cases, not a continuous change.
c) No: the total sales = the sum of the daily sales, obviously.

14. (4) A motor boat is made fast to a buoy in the middle of a river which is flowing at a constant rate of 8 mi/hr.
a) The line to the buoy is cast off, but the owner fails to get the engine to start for half an hour. Where is the boat, relative to the buoy, when the engine at last decides to run?

b) If the boat can make 20 mi/hr in still water, how fast (relative to the banks) will it travel upstream?
c) How long will it take to return to the buoy once the engine was started?
d) If it keeps on upstream at the same rate, where will it be at the end of 2 hr after the engine started?
e) How long would it have taken to reach this point if the engine had started when the boat cast off from the buoy?
f) Show that your results agree with the equation (B-2.15): $x = x_o + D$.

Answers:

(a) -4 mi or 4 mi downstream.

(b) Speed relative to the river bank = 20 - 8 = 12 $\frac{mi}{hr}$.

(c) $t = \frac{D}{r} = 4 \text{ mi} \times \frac{hr}{12 \text{ mi}} = 1/3 \text{ hr or } 20 \text{ min.}$

(d) $D = rt = 12 \frac{mi}{hr} \times 2 \text{ hr} = 24 \text{ mi} - 4 \text{ mi}$
$= 20 \text{ mi.}$

(e) $t = \frac{D}{r} = 24 \text{ mi} \times \frac{hr}{12 \text{ mi}} = 2 \text{ hr.}$

15. (6) Assume that you can obtain electrical signals analogous to the acid flow and volume signals, and show an analog computer solution for the hydrochloric acid example given in the test. Complete the block diagram below representing the input by U and the initial volume of V_o (Gallons). Use correct units.

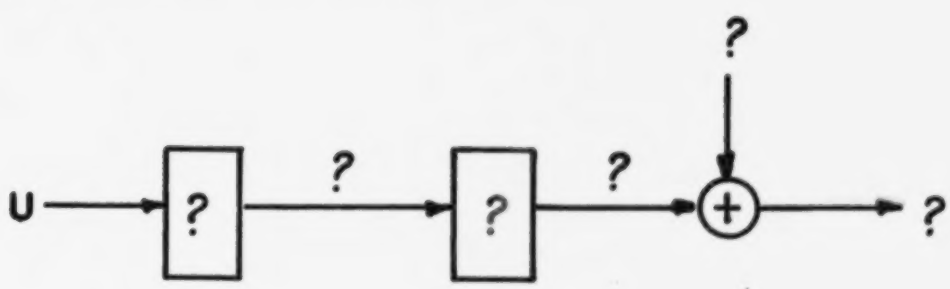

Answer:

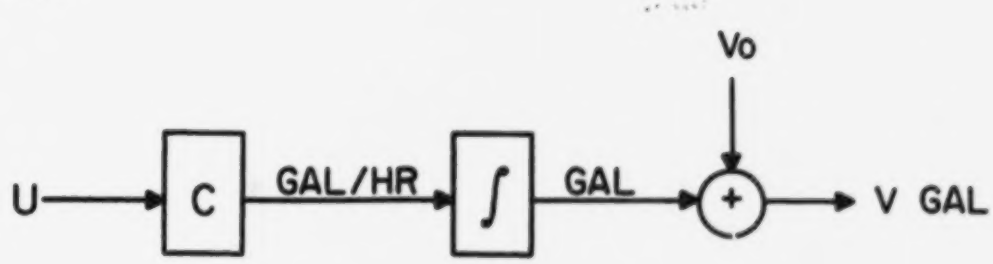

B. Test Questions and answers:
(Use 1 (a) or 1 (b), not both)

1. (a) **A car is stopped at a red traffic light. As the light turns green the driver accelerates, the car travels toward another red light and then stops at it. Below is a speed vs. time record of this short trip.**

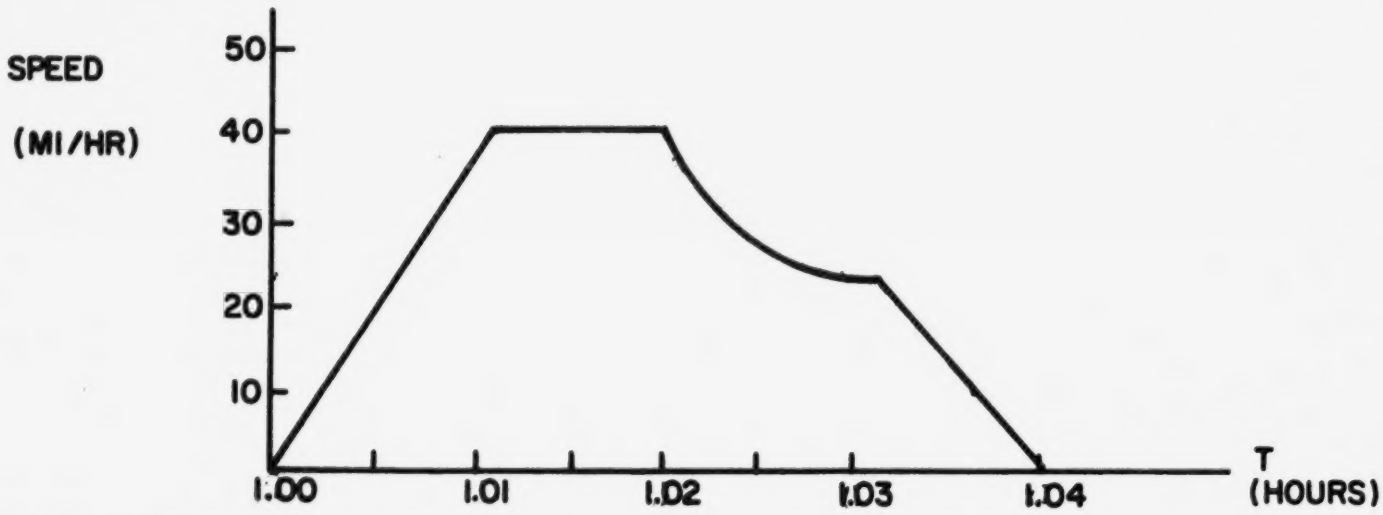

Questions:

a) How far did the car travel in the first .01 hr. of this trip?

b) Estimate the value of the acceleration for the first .01 hr. of this trip.

c) During what time interval did the car experience an acceleration of zero for more than an instant?

d) Estimate the distance between the two traffic lights.

e) Describe the <u>acceleration</u> of this car between 1.02 and 1.03 hrs.

f) What was the average speed of the car for the entire trip?

Answers:

a) Distance = Area = $\frac{bh}{2} = \frac{0.01 \text{ hrs}}{2} \times 40 \frac{\text{mi}}{\text{hr}} = 0.2$ mi.

b) Acceleration = Slope = $\frac{\Delta v}{\Delta t} = \frac{40 - 0}{0.01 - 0} = 4000 \frac{\text{mi}}{\text{hr}^2}$

OR $4000 \frac{\text{mi}}{\text{hr}^2} \times \frac{5280 \text{ ft}}{\text{mi}} \times \left(\frac{\text{hr}}{3600 \text{ sec}}\right)^2 = \frac{2.11 \times 10^7}{1.3 \times 10^7} = 1.63 \frac{\text{ft}}{\text{sec}^2}$

c) From time 1.01 to 1.02 hrs. (Slope is zero.)

d) Distance between lights is the sum of the Areas:

I		= 0.2 mi.
II	$40 \frac{\text{mi}}{\text{hr}} \times 0.01$ hr	= 0.4
III	$\left(\frac{36 - 21}{2}\right) \times 0.012$	= 0.09
IV	21×0.012	= 0.25
V	24×0.008	= 0.19
		1.13 mi.

e) Acceleration varies from a high negative value to zero.

f) Approximately 25 $\frac{mi}{hr}$.

1. (b) The graph below is a velocity versus time graph of a car traveling from town A to town B.

(a) How far did the car travel during the first hour?

(b) How far is town A from town B?

(c) In what parts of the trip would you find the car traveling with constant velocity?

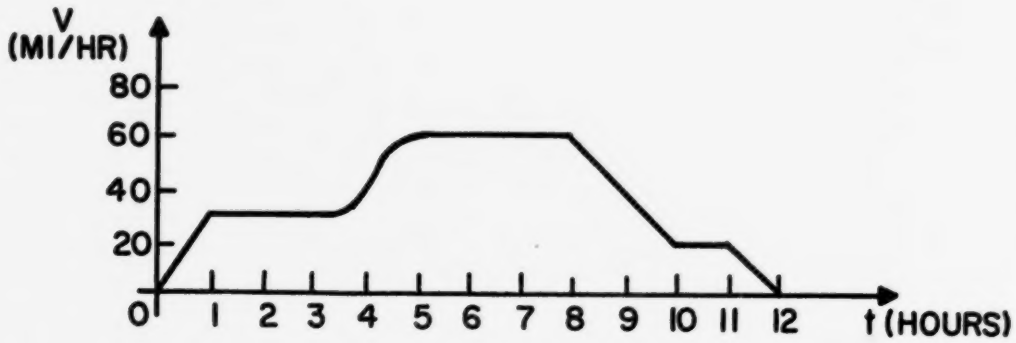

Answers:

a) Distance = Area = $\frac{bh}{2} = \frac{1\ hr}{2} \times \frac{30\ mi}{hr} = 15$ mi.

b) Distance between towns is the sum of the areas:

$15 + 8 + 15 + 30 + 200 + 40 + 20 + 20 + 10 \approx 460$ mi.

c) From t = 1 to t $\approx$ 3.7; t = 5 to t = 8; t = 10 to t = 11 hrs.

2. A truck traveling at 40 mi/hr passes over the crest of a hill. The driver coasts down the hill and finds that at the bottom of the hill his truck is traveling at 60 mi/hr and it took him only 15 seconds to accelerate this much.

(a) What was his average acceleration? (mi./hr. sec.)

(b) How far did the truck travel in going down the hill?

(c) After 5.0 seconds while on the hill the truck was traveling about ____?____ miles per hour.

Answers:

a) Acceleration = slope = $\frac{\Delta v}{\Delta t} = \frac{60 - 40}{15 - 0} = \frac{20}{15}$ or $1.33 \frac{mi}{hr\ sec}$

b) Average velocity = $\frac{50\ mi}{hr} \times 15\ sec \times \frac{hr}{3600\ sec} = 0.21$ mi.

c)

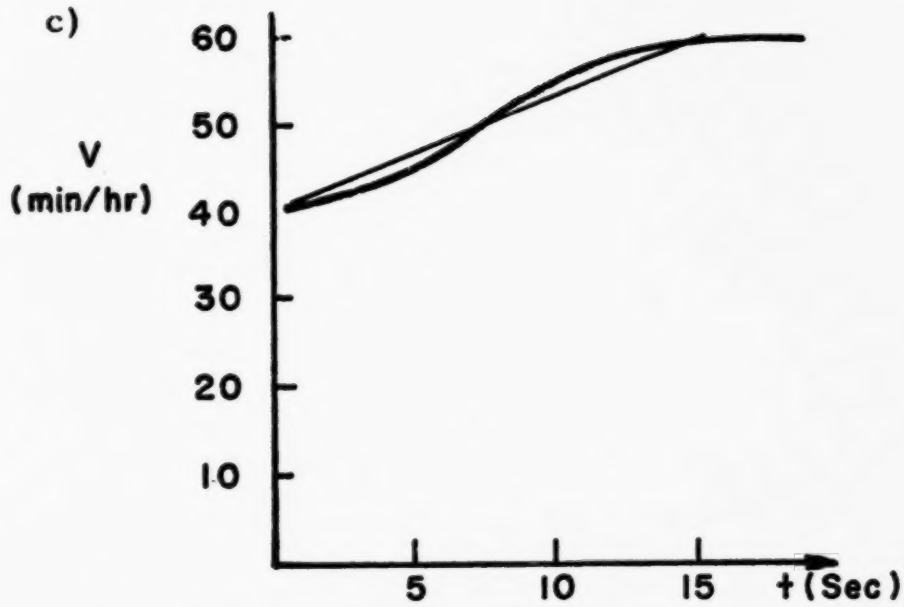

APPROXIMATELY

$44 - 45 \frac{mi}{hr}$

3. The pit log of a ship utilizes a small propeller for which the number of revolutions per minute n is directly proportional to the speed through the water. A certain device rotates at 200 revolutions per minute for a velocity of 10 knots (1 knot = 1 nautical mile per hour; 1 nautical mile = 6076 feet). In one short trip n increases from 0 to 300 and then decreases to zero in the form of a semi-circle, as sketched below. (a) What was the maximum speed attained? (b) How many revolutions did the pit log make? (c) What distance in nautical miles did the ship travel?

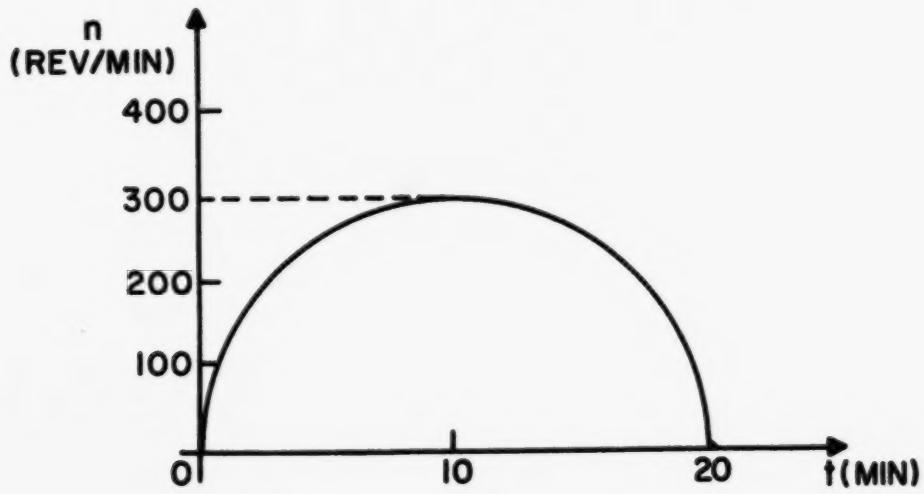

Answers:

a) $\frac{200 \text{ rev.}}{\text{min}} \times \frac{1}{10 \text{ knots}} = \frac{20 \text{ rev}}{\text{knot min.}}$

$300 \frac{\text{rev}}{\text{min}} \times \frac{\text{knot min.}}{20 \text{ rev.}} = 15 \text{ knots}$

b) Revolution = Area = $\frac{\pi r^2}{2}$ (one r = 300 $\frac{\text{rev}}{\text{min}}$; the other r = 10 min)

$= \frac{\pi}{2} \cdot 300 \frac{\text{rev}}{\text{min}} \times 10 \text{ min}$

$= 1500 \pi = 4710$ rev.

(Check results by approximating the semi-circle with a rectangle of about 240 $\frac{\text{rev}}{\text{min}}$ x 20 min)

c) 4710 rev. x $\frac{\text{knot min.}}{\text{20 rev.}}$ x $\frac{\text{1 nautical mi.}}{\text{knot hr.}}$ x $\frac{\text{hr}}{\text{60 min}}$ = 3.92 nautical mi.

4. In the model of an experimental electrical system shown below, various batteries may be put between point N and P, and resistors R of different values may be substituted between points C and D. The ammeter at A reads the current in this series network.

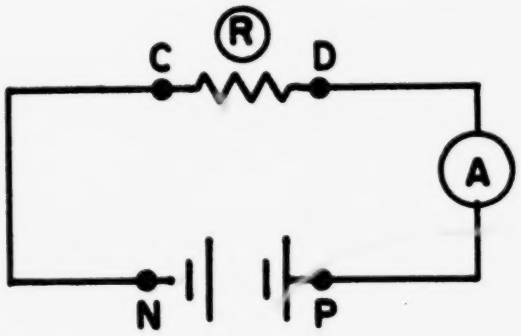

A student conducts a series of experiments with this circuit and the data from his experiments are shown in the table below. Throughout this experiment the same resistor is used.

BATTERY VOLTAGES [VOLTS]	CURRENTS [AMPERES]
2.0	.010
3.0	.016
4.0	.021
5.0	.025
8.0	.041
10.0	.049
16.0	.080

Questions:

a) In the graph grid below make a free-hand graphic model of the relationship between voltage (VOLTS) and current (AMPS) from the experimental data.

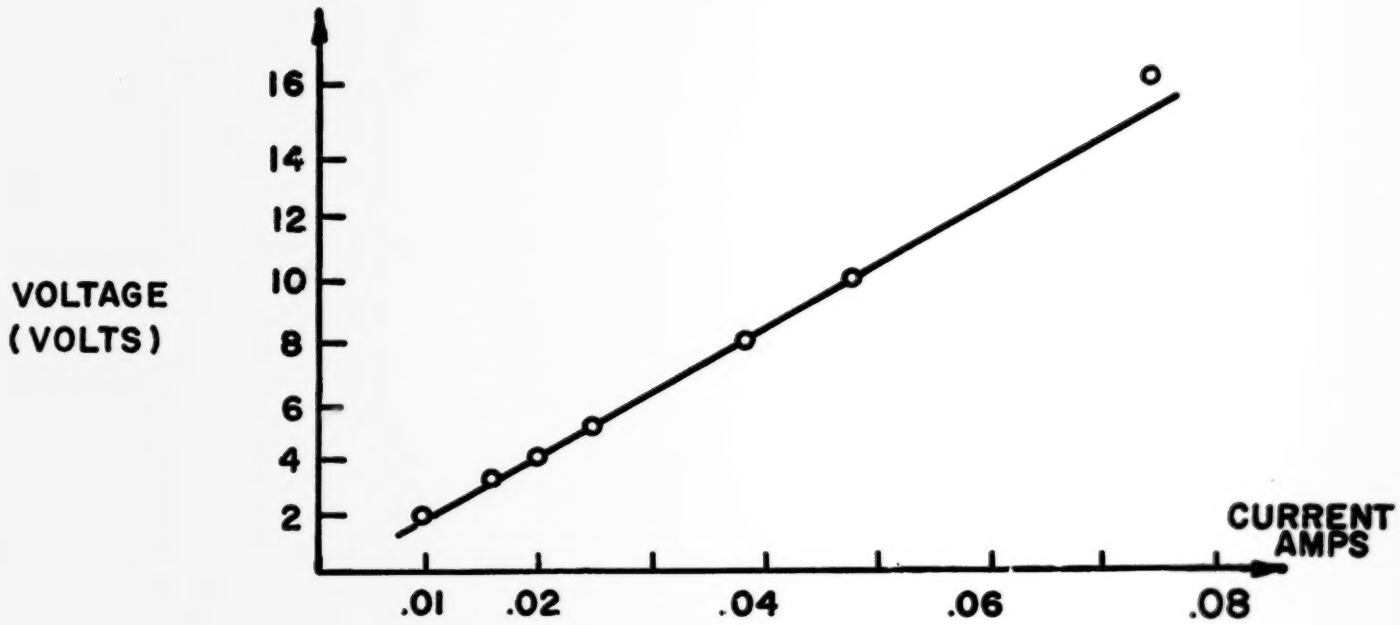

b) From your free-hand plot of volts vs. amps estimate the approximate numerical value of the SLOPE of this curve.

c) What is the approximate numerical value of the area under this curve from zero amps to 0.05 AMPS?

d) Write an equation that gives the relationship that exists between the voltage and current as determined from this experiment.

e) Estimate the amount of current that should pass through the resistor if it was connected in series with a 6.0 volt source of electricity.

Answers:

b) $\text{Slope*} = \frac{\Delta \text{Volts.}}{\Delta \text{Amps.}} = \frac{16 - 2}{0.082 - 0.011} = \frac{14}{0.071} \approx 197$

c) $\text{Area} = \frac{bh}{2} = \frac{0.05 \times 10}{2} \approx 0.25$

d) $k = \frac{V}{I}$ or $V = kI$ or $V = 197I$

e) Approximately 0.03 amps.

*Slope of voltage - current graph is resistance (k).

5. A passenger in a car records the time the car passes exits along a highway. These data are shown in the graph below. The car speed is constant at 50 mi/hr for the entire trip.

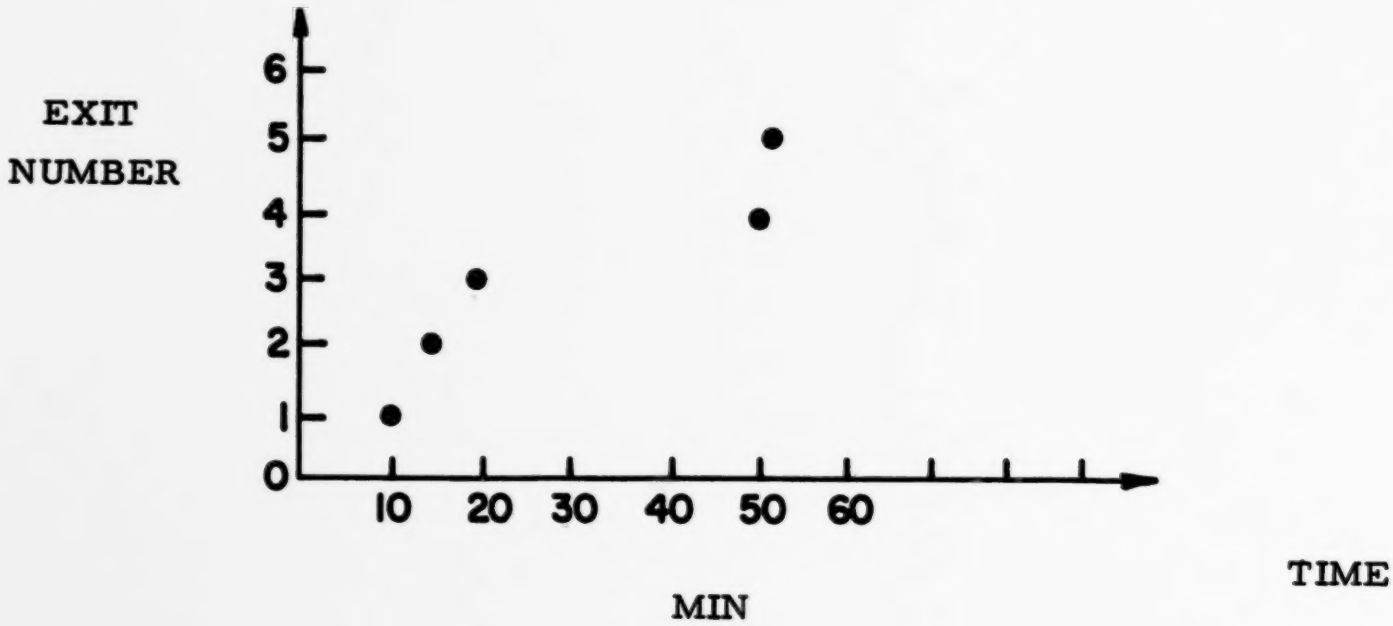

Questions:

a) How long from the start of the trip did it take before passing Exit 1?

b) How many miles between Exit 1 and Exit 5?

c) The greatest distance between adjacent Exits is found between Exit _____ and Exit _____.

d) What is the average travel time between Exit 1 and Exit 5?

e) Why is it not valid to draw a curve on this graph?

f) If the car continues to travel at 50 mi/hr along this highway, what statement can be made about predicting your time of arrival at Exit No. 6?

Answers:

a) 10 min.

b) $41 \text{ min} \times 50 \frac{\text{mi}}{\text{hr}} \times \frac{\text{hr}}{60 \text{ min}} \approx 33 \text{ mi.}$

c) Exit 3 and Exit 4.

d) $\frac{41 \text{ min}}{4} = 10 + \frac{\text{min}}{\text{exit}}$

e) Discrete function

f) (1) No prediction or

(2) If we assume $10 \frac{\text{min}}{\text{Exit}}$ and No. 6 is average distance, then arrival at $\approx$ 60 min.

C. Discussion Questions

1. A distance-time curve is given by the equation $d = 30t^2 - 6t^3$, where d is in meters and t is in seconds. Draw a graph of d versus t and find the velocity at t = 2 seconds and t = 4.5 seconds.

Answer: Set up a table of values of d for intervals of 1 second.

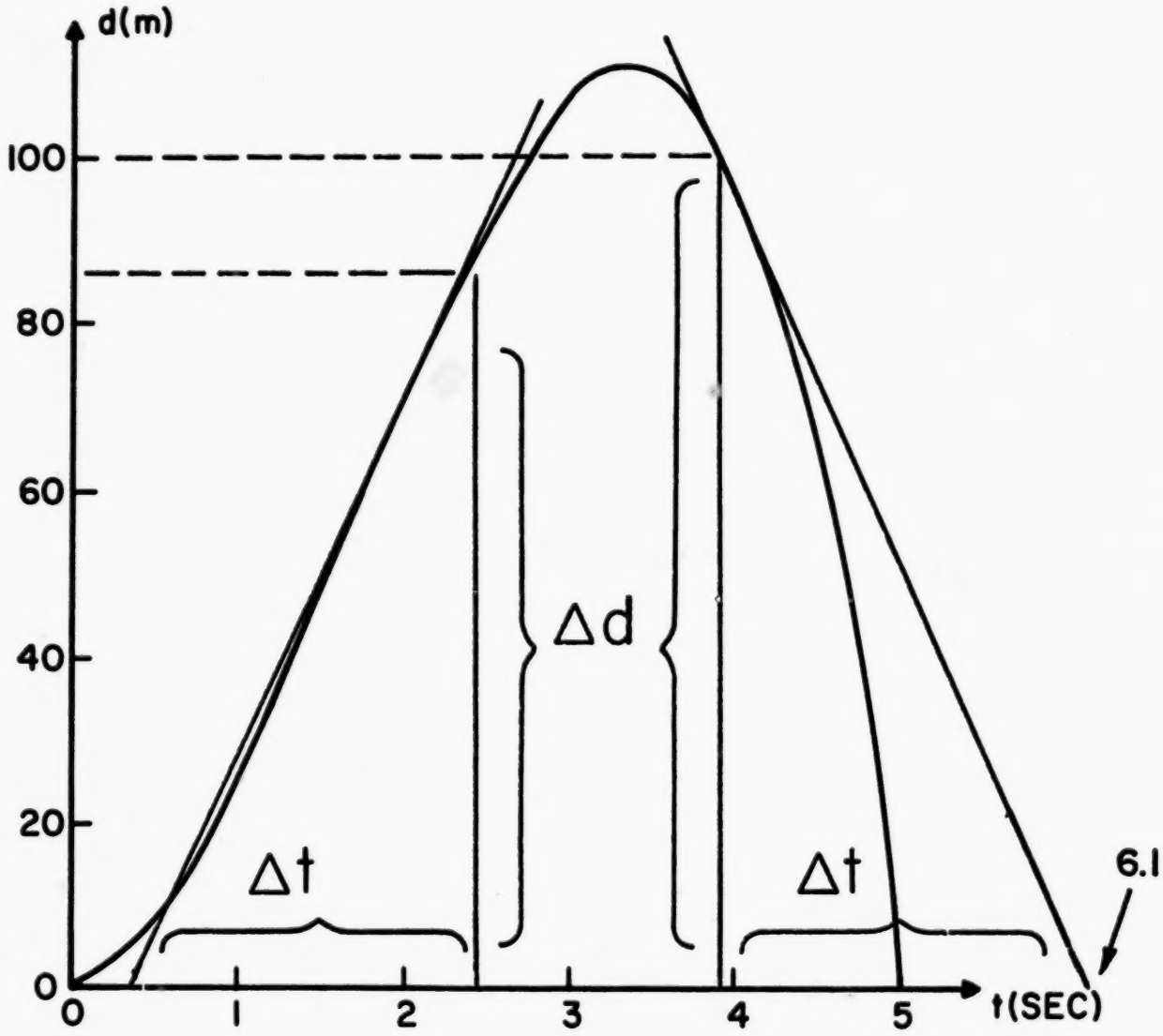

for t = 2 seconds, velocity is the tangent to the line; velocity = $\frac{\Delta d}{\Delta t}$ = $\frac{89 - 0}{2.3 - 0.3} = \frac{89}{2} \approx 44.5 \frac{m}{sec}$.

for t = 4 seconds; $\Delta d = \frac{0 - 100}{6.1 - 3.9} = \frac{-100}{2.2} = -45.4 \frac{m}{sec}$.

2. The graph of positions of an enemy plane is determined by a radar operator on the ground, 3000 miles from Washington, D. C. At 12:00 the plane was 3000 miles from Washington, D. C. At 12:10 the radar operator prediced its time of arrival over Washington, D. C.

(a) What would that predicted time be?

(b) At 12:20 he makes a new prediction. What is the new predicted time?

(c) What would his prediction be if he made it at 13:00?

(d) How do you account for the discrepancies in these predicted times?

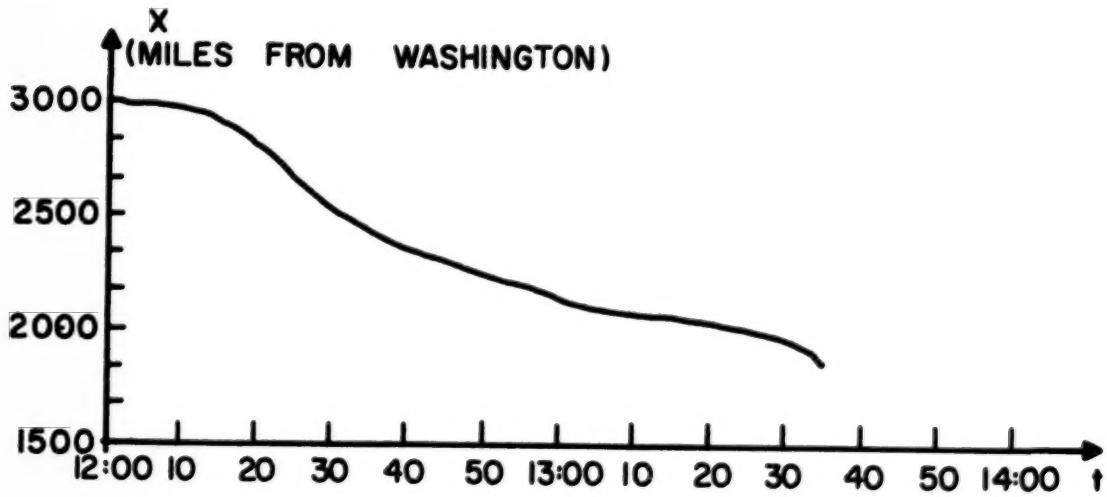

Answers:

(a) 17:40

(b) 14:40

(c) 13:45

(d) As the curve available to the radar operator grows longer and longer, he has a greater spread between its extreme points and hence a more reliable average value of the plane's velocity.

3. In addition to its use as a dynamic functional model, the analog computer is also useful as a device for solving simultaneous linear algebraic equations automatically. For example, suppose we wish to solve the following set of equations with an analog computer:

$$x = y + 3$$

$$y = 3x - 1$$

The first equation modeled on the analog computer is:

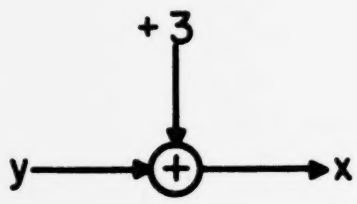

The second equation modeled on the analog computer is:

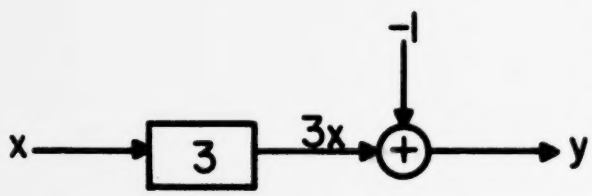

Now we see that if we had y we could get x and if we had x we could get y, so we combine the above results as follows and read the values of x and y with a meter.

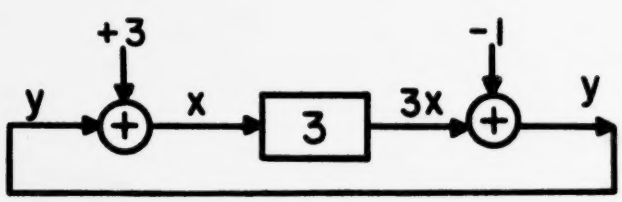

Using the above technique, prepare an analog computer solution for the following set of equations:

$$4x + 3y = 6$$

$$3.5y = 7x$$

Answer:

Rearranging the equations into the standard slope - y intercept form, $y = mx + b$:

$$y = -\frac{4}{3}x + 2$$

$$y = 2x$$

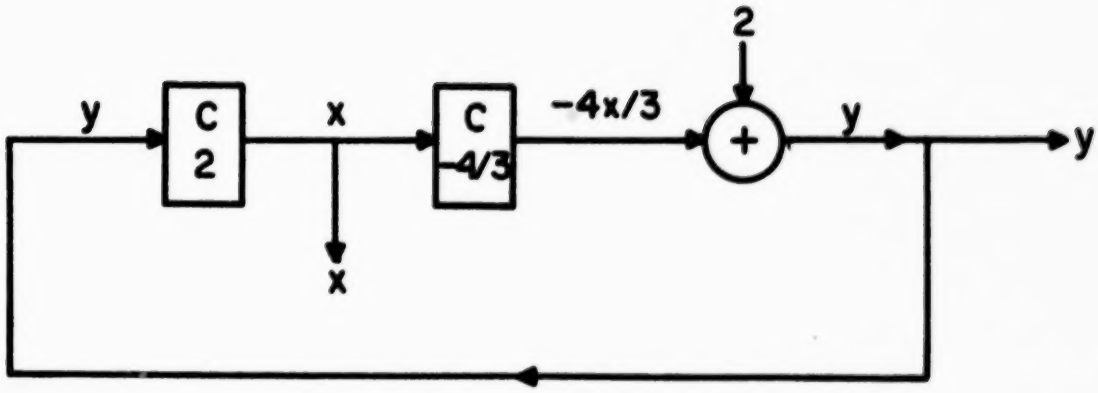

4. You are standing at 40° north latitude. What is your velocity in mi/hr. as a result of the earth's rotation about its axis? The earth's radius is about 4000 mi.

Answer:

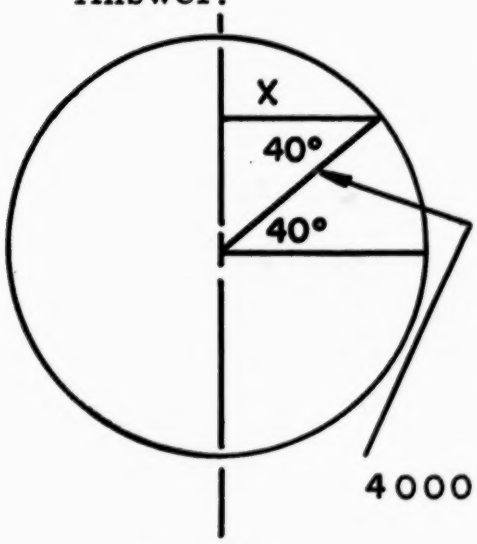

$$x = 4000 \text{ Cos } 40^{\circ}$$
$$= 4000\ (0.766) = 3060 \text{ mi.}$$

Circumference at 40° north

$$= 2\pi x = 2\pi \cdot 3060$$

velocity at 40° north latitude

$$v = \frac{D}{t} = \frac{2\pi \cdot 3060 \text{ mi}}{24 \text{ hr}} = 794 \frac{\text{mi}}{\text{hr}}.$$

5. Because of our space and military programs and because of the large increase in mobility of all Americans in recent years, a great deal of engineering effort has been expended to develop systems which are useful in the navigation of vehicles of all sorts.

If the vehicle moves on or close to the surface of the Earth, navigation is a relatively simple matter since measurements with respect to the ground are comparatively easy to make. Vehicles now exist, however, where contact with the ground for the purpose of position measurement is difficult or impossible.

One such example is the Polaris submarine which may travel submerged for weeks without ever surfacing. In this submerged condition, it is impossible to check position by sighting on the sun or the stars, and radio aids such as loran (long distance radio navigation) cannot be used. In such cases, inertial navigation, in which the instrumentation is completely contained in the vehicle, is applicable. This technique requires no external observations and so is useful in submarines, space vehicles, and other vehicles where external observation is difficult or impossible.

The heart of the inertial navigation system is the accelerometer, an electro-mechanical device which is capable of measuring acceleration with high precision. It produces an electrical signal which is proportional at every instant to the acceleration of the vehicle on which it is mounted. This signal is fed to the input of an electronic integrator which continuously calculates the area under the a, t curve. The output of this integrator is thus equal to the velocity of the vehicle at each instant. This output is fed into another integrator. This second integrator calculates the area under the v, t curve, and its output is at every instant equal to the displacement of the vehicle. (Of course, in order to compute present position using the accelerometer output signal, it is necessary to feed initial velocity and displacement information to the integrator.)

Draw a block diagram of the model of an inertial navigation system. Such a system consisting of an accelerometer and two integrators provides us at every instant with the values of the acceleration, the velocity, and the displacement of the vehicle, and this is all the information we need to navigate the vehicle. Inertial navigation systems of this kind have been used in many applications. For example, the submarines that have gone to the North Pole under the polar ice cap have used inertial systems for navigation under the ice cap. An inertial navigator is also a vital part of missile guidance systems.

Answer:

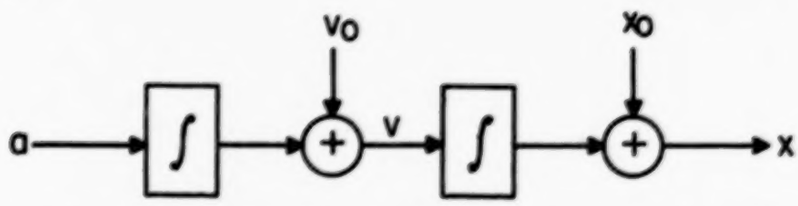

6. In this problem we seek a technique for determining area under a time-dependent curve hydraulically, i.e., we want to construct a hydraulic integrator. Assume that we have a speedometer available which is calculating the velocity of a moving vehicle. We would like to integrate these data continuously to yield a continuous indication of distance traveled as shown in the following block diagram. The operation indicated by the block labeled "hydraulic integrator" can

be accomplished crudely by attaching the speedometer pointer to a valve which controls the flow of water into a U-shaped tube as indicated in the figure below. Can you further explain how distance is found with this hydraulic device?

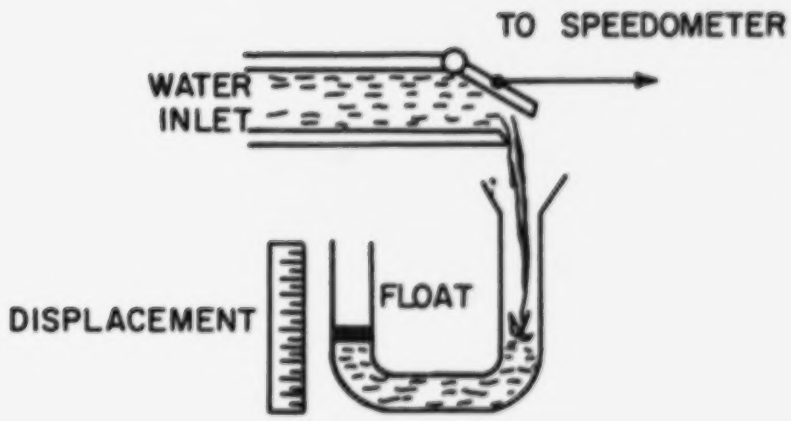

Answer:

Since the volume of water per unit time which escapes from the valve is directly proportional to the velocity of the vehicle (at least to a first approximation), the total volume of water caught in the U-tube is a measure of the distance covered. Since the cross-sectional area of the U-tube is constant, the upward displacement of the float gives a number proportional to the distance, and the scale could be calibrated to read miles directly.

7. For the vehicle motion system as described in the text, determine the output displacement when the accelerator control is moved abruptly one unit and then held constant (in other words, the signal C is zero for t negative and unity for t positive.)

Answer:

$$d = \frac{1}{2} t^2 \text{ (or a parabola)}$$

8. A boat is traveling upstream on a river at a speed relative to the water which varies with time as shown in the figure below. The water flows downstream at a constant speed of 10 miles per hour. (a) How many miles has the boat traveled at the end of the first hour? (b) the fourth hour? (c) the fifth hour?

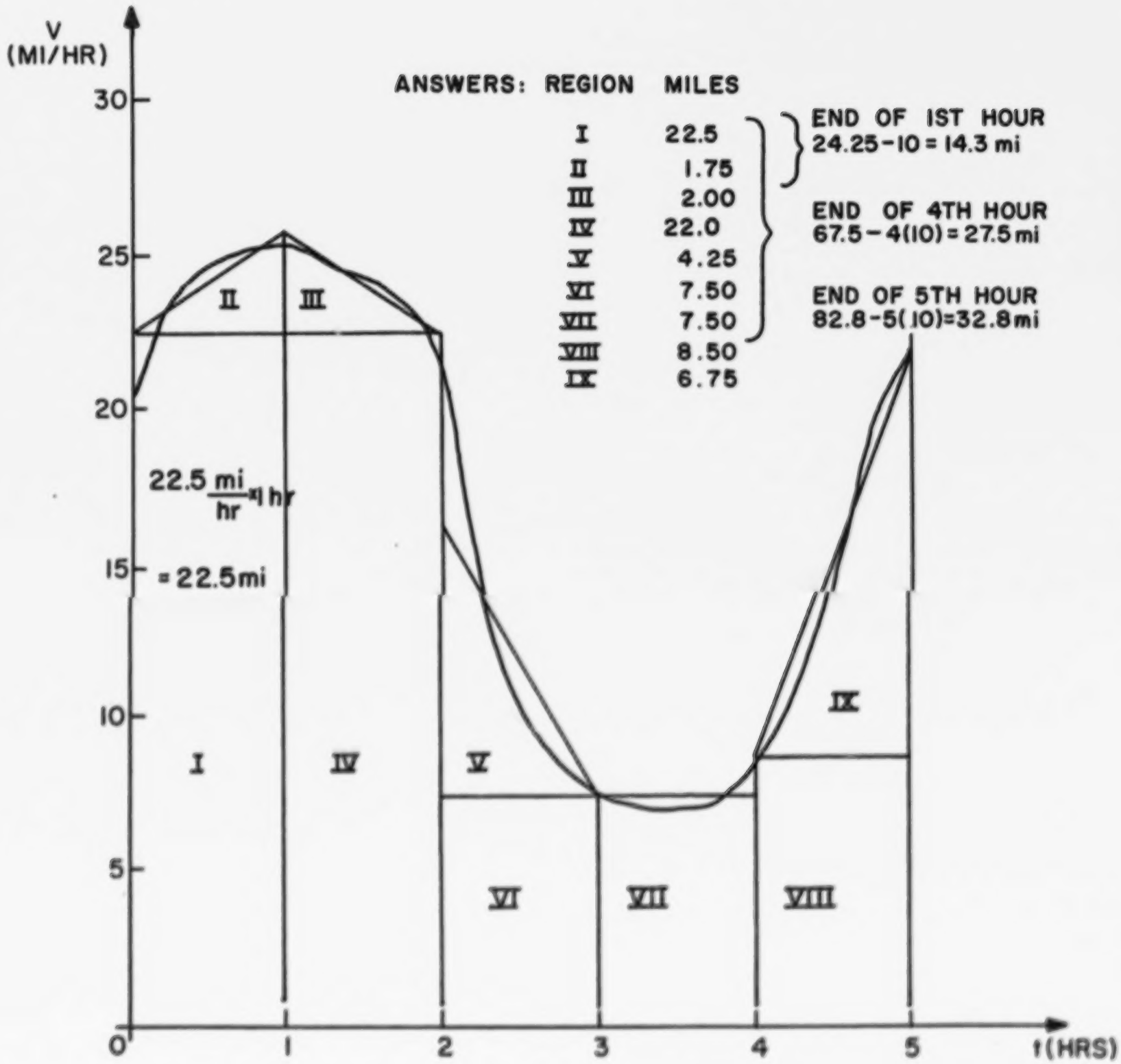

ANSWERS:

REGION	MILES
I	22.5
II	1.75
III	2.00
IV	22.0
V	4.25
VI	7.50
VII	7.50
VIII	8.50
IX	6.75

9. Velocity and acceleration are not the only signals of motion we might consider. Just as velocity is the rate of change (or derivative) of displacement and acceleration is the rate of change (or derivative) of velocity, we might expect that the rate of change of acceleration has some physical meaning. This signal, however, is usually of much less interest in our study of man-made systems. It has been given a name: jerk or jerkiness, since the rate of change of acceleration measures in a very general sense the extent to which the passenger in a moving body feels that the motion is "jerky." Very rapid changes in acceleration are a major source of discomfort! The laws of nature, however, tell us that rapid changes in acceleration occur only if there are rapid changes in force applied to the body. Hence, in an automobile, for example, we can avoid excessive jerkiness by depressing the accelerator at a moderate rate.

If you encountered a motion problem in which you were required to find the vehicle displacement which resulted from very violent, jerky manipulation of the acceleration control, how would you program the analog computer to find a solution?

Answer: Use three integrators in series.

10. An electron is thought to orbit around the nucleus of an atom in a circular orbit, according to one model of the atom. This model also states that the radius of the electron orbit is 1 Angstrom (0.0000000001 meters or 1×10^{-10} meters) and it orbits the nucleus 1×10^{15} times each second (1,000,000,000,000,000).

a) What mathematic equation can we use to find the average speed of this orbiting electron?

b) Estimate the speed of this orbiting electron.

Answers:

a) $v = \frac{2\pi R}{T} = 2\pi Rf$

b) $v = 2\pi Rf = 2\pi\ (10^{-10})\ (10^{15}) = 6.28 \times 10^{5}\ \frac{m}{sec}$.

IX. Supplementary Materials

A. Notes on Graph Construction

In constructing a graph for a measured or tabulated signal, the following steps are taken:

(1) The horizontal scale is chosen. Here it is usual to measure time in any convenient units, and we determine the total time duration of interest.

(2) To select the vertical scale, we observe the given data, and find the minimum and maximum values of the signal. The vertical scale is then made to cover this range.

(3) We next draw the horizontal and vertical axes, mark on each its scale, conveniently subdivided, and labed appropriately.

(4) The data points are plotted and a smooth curve is drawn.

While these steps sound trivial, the construction of an attractive and readily interpreted graph is an essential step if we are to capitalize on the potential of a graphical portrayal of the signal. In order to illustrate the four steps above, we consider the following example.

We are attempting to teach a 16-year-old to drive a car. One of the tasks we present to him is to bring the car to a stop at a chalk line drawn on the straight driveway of his home. In other words, he need not turn the steering wheel at all, but we are asking him to move the car frontward or backward until he has stopped at the desired position. Measurements are made of his actual position with respect to the mark (if he is 5 feet in front, we say his position is + 5 at that time; 4 feet behind the mark is denoted - 4). The data are measured every 5 seconds with the following results: + 5, + 6, + 3, - 1, - 6, - 14, -19, -22, -23, -21, - 16. We wish to plot these 11 data points covering an interval of 50 seconds.

(1) We first determine the horizontal scale. Since we wish to cover 50 seconds, we can let t be measured in seconds and vary from 0 to 50. If we use graph paper, we can select 10 segments along the horizontal direction, with each segment representing 5 seconds; if we make our own graph paper by drawing lines on plain paper, we will want at least 10 segments (11 vertical lines).

(2) Next we consider the range of signal values (from + 6 to - 23). It is convenient to plan to plot the range + 10 to - 30 (a total range of 40). If we want 0 in the middle of the page, we might decide to plot + 25 to - 25. The choice between these two alternatives is largely immaterial; we can use whichever appeals to us aesthetically. In order to proceed, we arbitrarily decide to cover the range + 10 to - 30. If we have eight segments vertically, each represents a change in signal of $\pm$ 5 feet.

(3) We now are ready to draw and label the axes. We select 10 segments horizontally and 8 vertically, Fig. 1 (a). The horizontal axis is drawn 2 segments from the top since the signal axis is to go from + 10 to - 30, (b). The vertical axis is drawn at the left of the graph because time runs from 0 to 50, (c). Once the axes are drawn, the labels can be added (d).

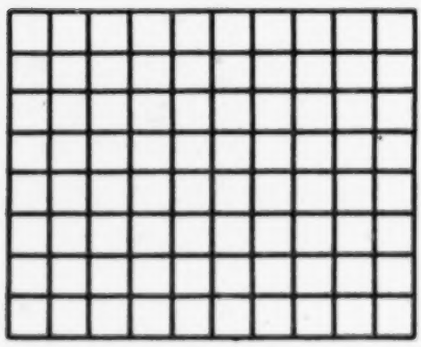

(a)

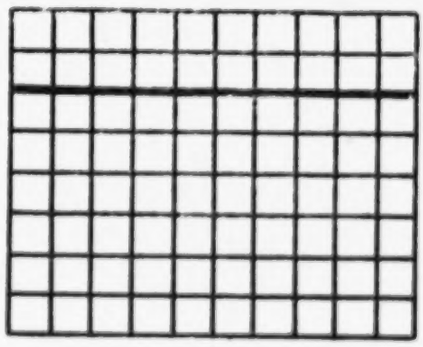

(b)

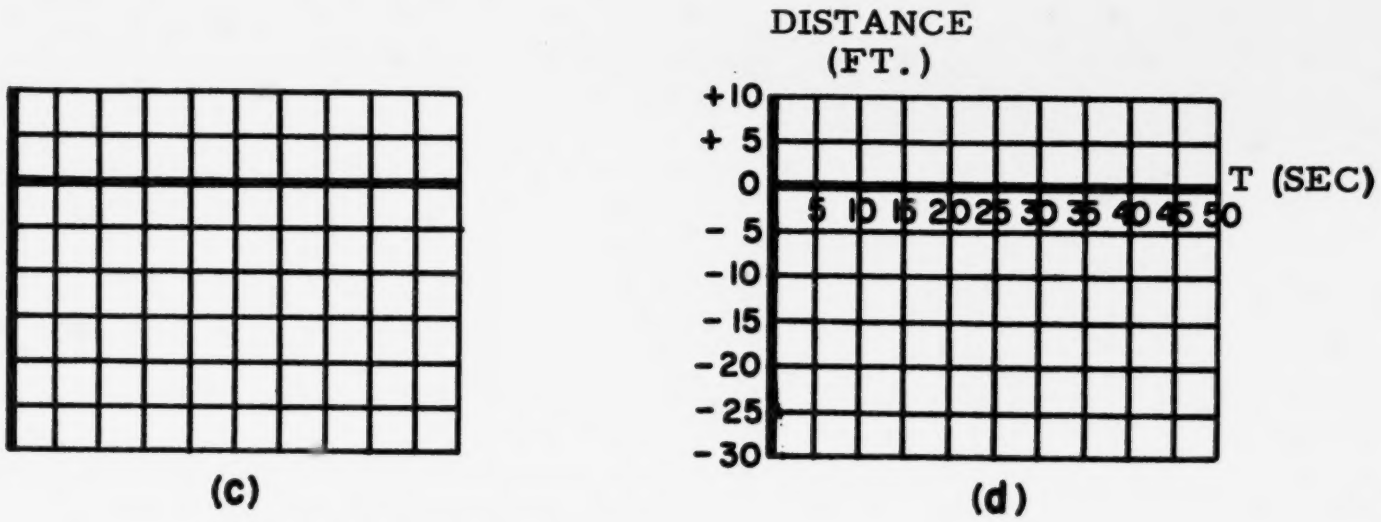

Fig. 1 Preparation of the graph paper for the example.

(4) Finally, we plot the eleven points given as data and connect by a smooth curve -- Fig. 2.

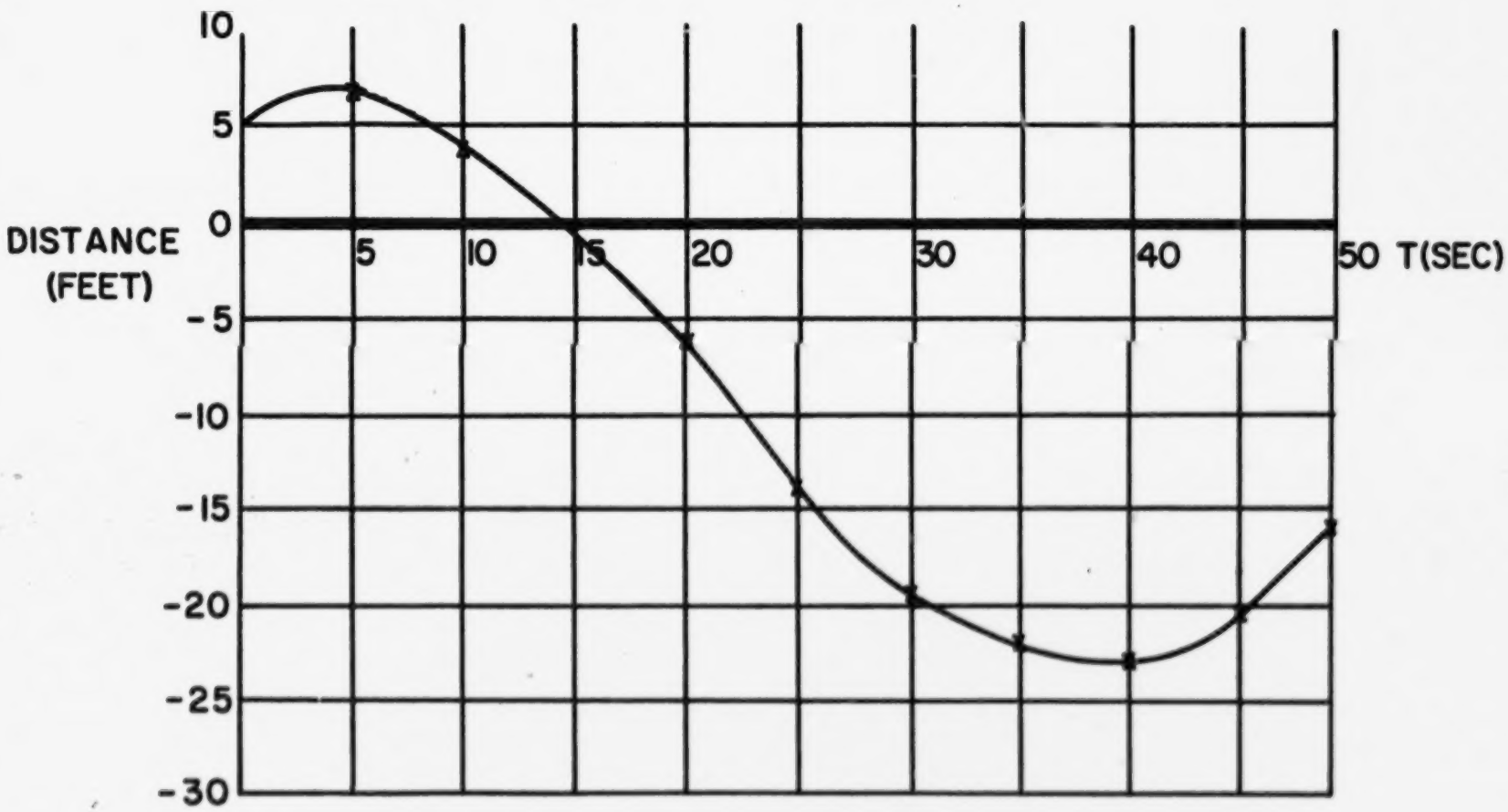

Fig. 2 Plot of automobile position

The curve indicates at once what the neophyte driver has done. He started 5 feet ahead of the mark and moved forward to about + 6 feet. Here the car was put in reverse and gas applied. Unfortunately, the driver greatly overestimated the need for gas and the car sailed far behind the chalk mark. By the time he had applied the brake and shifted to start forward again, he was about 23 feet behind the line. We can only hope that his performance improves the next time.

Our primary purpose in this example, however, is not to study the behavior of untrained drivers. Rather, we wish to illustrate the systematic approach to the rather trivial task of constructing a graphical portrayal of given signal data.

B. Optical Method for Determination of Tangents

To determine the slope of a tangent to a curve at a particular point accurately, place a small plane mirror across the curve at the point. Rotate the mirror about the point until the curve and its image form a smooth path with no cusp. Then the plane of the mirror is perpendicular to the tangent at that point.

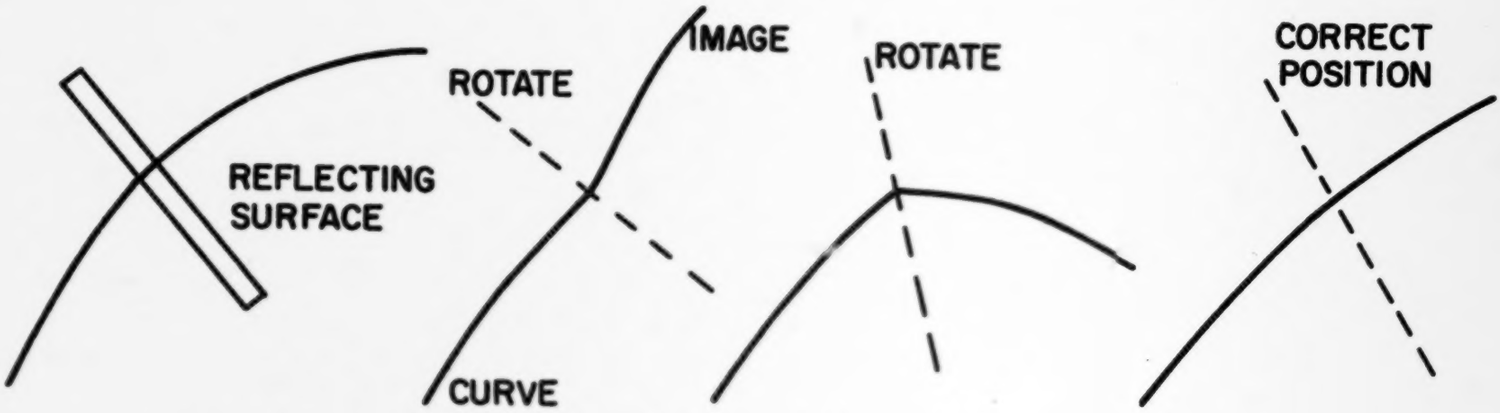

A front-silvered mirror should be used if possible.

C. Resource Material

"Electronic Analog Computer Primer" by S. J. Edward and B. S. Swanson, Blaisdell Publishing Co., New York, 1965. An inexpensive paperback which discusses the analog computer from an elementary and thoroughly readable viewpoint.

Theory of the Analog Computer

The "heart" of every computational unit in the Analog Computer is the electronic or solid state amplifier. These amplifiers have very high gain (we will see the reason for this later on) and are generally referred to as high gain or OPERATIONAL AMPLIFIERS.

To understand the operation of the Analog computer we must first realize that an amplifier is a device which produces an electrical signal whose magnitude is some negative constant multiple of the magnitude of the signal which is fed into the amplifier. We can represent the operational amplifier by the triangular shaped symbol shown below, and we express the operation of the amplifier by the equation:

$$e_s = -Ae_1$$

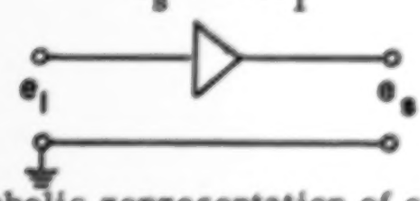

Fig. 1 Symbolic representation of operational amplifier

If resistors are connected to an operational amplifier as shown in Fig. 2, we will see that the device becomes a Scalor, where the scaling factor depends on the relative size of the two resistors.

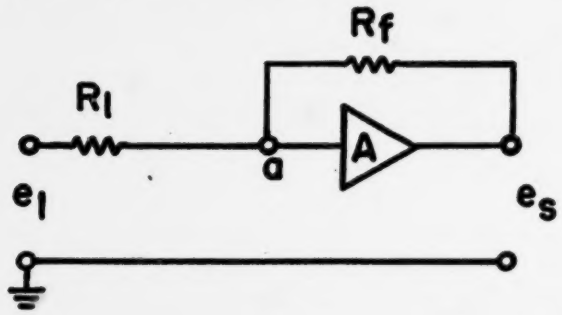

$$e_s = -\frac{R_f}{R_l} e_l$$

Fig. 2 Analog Scalor

To derive the relationship for the Analog Scalor we can use Kirchhoff's law at point a. The law states that the sum of the currents leaving a junction must be equal to the sum of the currents entering that junction. In Fig. 3, we have assumed the presence of three currents: i_1, i_a, i_f

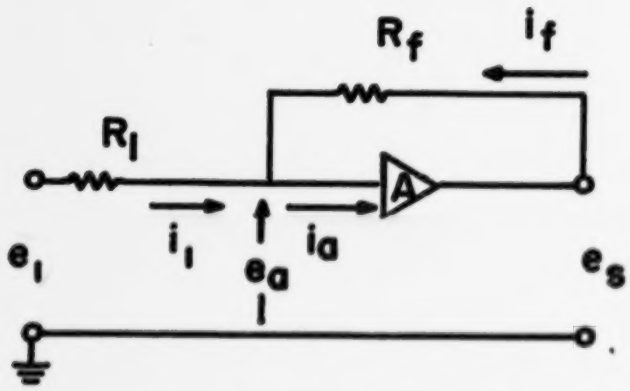

Fig. 3 Current directions identified

Since across any resistor $i = \frac{e}{R}$ we can say that:

$$i_1 + i_f = i_a \quad \text{or}$$

$$\frac{e_1 - e_a}{R_1} + \frac{e_s - e_a}{R_f} = i_a$$

Now, operational amplifiers have a second characteristic; that the current into them for any magnitude of input signal is extremely small. (It is on the order of 10^{-9} amperes). We say that the operational amplifier has a high <u>Input Impedence</u>. This input current is so small that we can for all practical purposes assume that it can be neglected with respect to i_1 and i_f. (i_1 and i_f are on the order of 10^{-3} amperes).

We are then left with the expression:

$$\frac{e_1 - e_a}{R_1} + \frac{e_s - e_a}{R_f} \approx 0$$

We know from the gain characteristic of the amplifier that $e_a = -\frac{e_s}{A}$ If we substitute this into the above equation we obtain:

$$\frac{e_1}{R_1} + \frac{e_s}{AR_1} + \frac{e_s}{R_f} + \frac{e_s}{AR_f} \approx 0$$

If A is very large, as we have stated, then the term $\frac{e_s}{AR_f}$ will be very much smaller than the term $\frac{e_s}{R_f}$ and can be neglected. A is generally on the order of 10^4 or 10^5.

Similarly the term $\frac{e_s}{AR_1}$ will be much smaller than the term $\frac{e_s}{R_f}$ since R_1 and R_f will, in general, differ at most by a factor of 10.

We are then left with the equation:

$$\frac{e_1}{R_1} + \frac{e_s}{R_f} = 0 \qquad \text{or}$$

$$e_s = -\frac{R_f}{R_1} e_1$$

The operations of summing and scaling are combined by simply connecting additional resistors to the input of the operational amplifier. This arrangement is shown in Fig. 4.

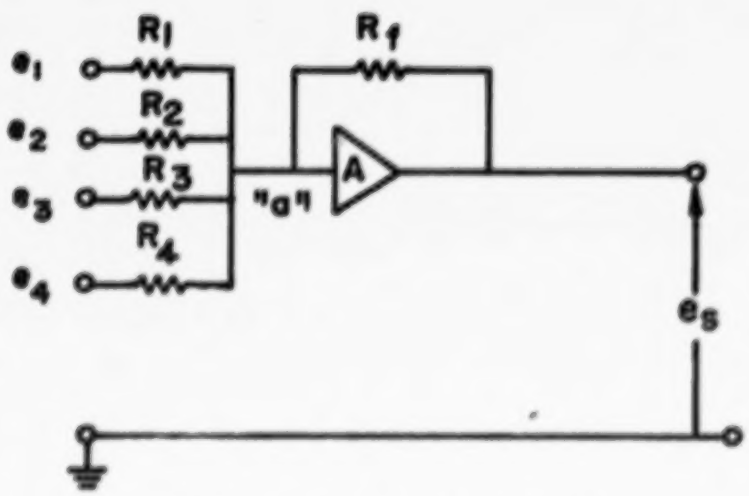

Fig. 4 Summing-Scalor

If we were once again to sum the currents leaving and entering the junction "a" and make the same two assumptions ($i_a = 0$, and A very large) we should obtain the expression:

$$e_s = -\left[\frac{R_f}{R_1} e_1 + \frac{R_f}{R_2} e_2 + \frac{R_f}{R_3} e_3 + \frac{R_f}{R_4} e_4\right]$$

You can see that if $R_f = R_1 = R_2 = R_3$, we have the <u>negative</u> adder.

In order to obtain a Ten Scalor, we simply let one of the input resistors be 1/10 of R_f.

A simplified diagram of the negative adder on the AMF Educational Computer is shown in Fig. 5.

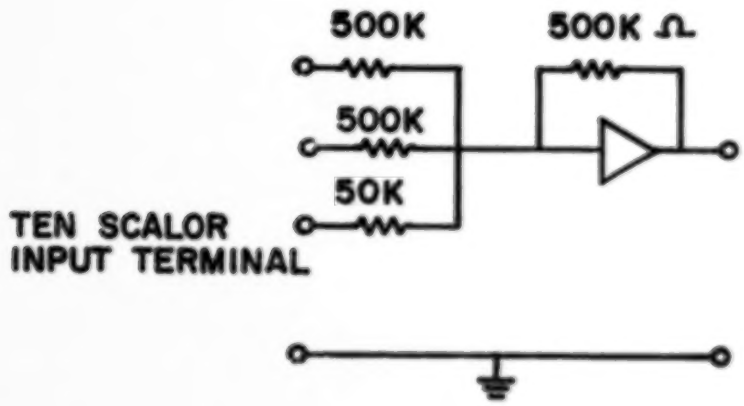

Fig. 5 Analog Adder

Note that the operational amplifier we have been discussing only produces a Negative Adder. If we want, in addition, a (positive) adder we could take the signal from a negative adder and put it through a circuit that would change its sign. This sign change could be accomplished by the circuit shown in Fig. 2 with $R_f = R_1$. One can purchase, however, an operational amplifier which has two inputs, one which processes the signal in the normal manner and one which multiplies the signal by a minus one. These are used in the computer to obtain the functions of the adder and the negative adder.

The function of the Variable Scalor is obtained by connecting the output signal from the optional amplifier across a variable resistance element. This element is called a potentiometer and is shown together with the negative adder in Fig. 6.

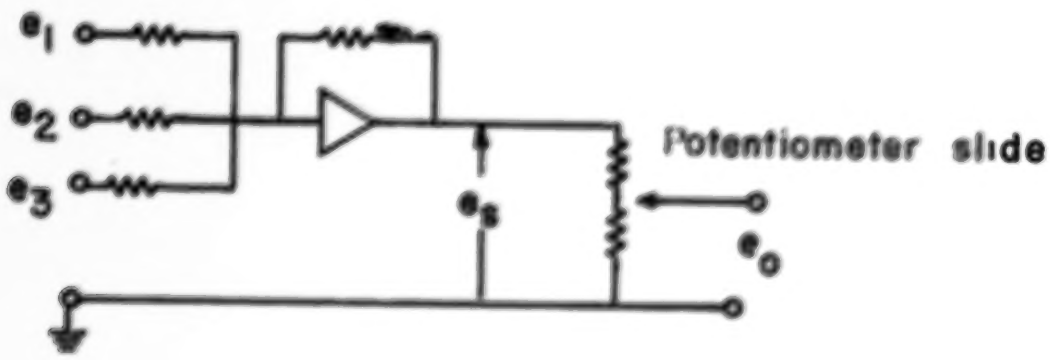

Fig. 6 Summing-Scalor (negative)

The ratio of the output signal e_o to the input signal e_s depends on the position of the slider and is always equal to or less than one (i.e., $e_o = Ce_s$ where $0 \leq C \leq 1$.)

The Analog Integrator circuit looks very much like the Adder circuit except that a capacitor is placed across the operational amplifier as shown in Fig. 7.

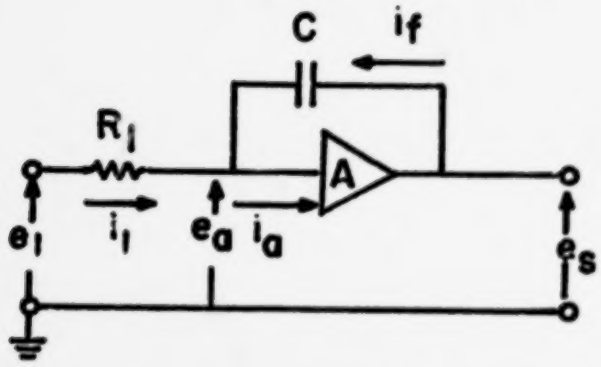

Fig. 7 Analog Integrator

The analysis of the circuit is as follows:

Once again we can say that

$$i_1 + i_f = i_a.$$

If we again assume that i_a is very small:

$$i_1 = - i_f$$

Now $i_1 = \frac{e_1 - e_a}{R_1}$ and a capacitor has a voltage-current relationship such that:

$$(e_s - e_a) = 1/C \int i_f dt \quad \text{or}$$

$$(e_s - e_a) = 1/C \int - i_1 dt = - 1/C \int \frac{e_1 - e_a}{R_1} dt;$$

if we substitute the operational amplifier relation, $e_a = - \frac{e_s}{A}$, we obtain:

$$e_s + \frac{e_s}{A} = - \frac{1}{R_1 C} \int (e_1 + \frac{e_s}{A}) dt.$$

If we again assume that A is large, we obtain the final expression for the Analog Computer.

$$e_s = - \frac{1}{R_1 C} \int e_1 dt$$

The summing integrator is made by simply adding additional resistors as shown in Fig. 8.

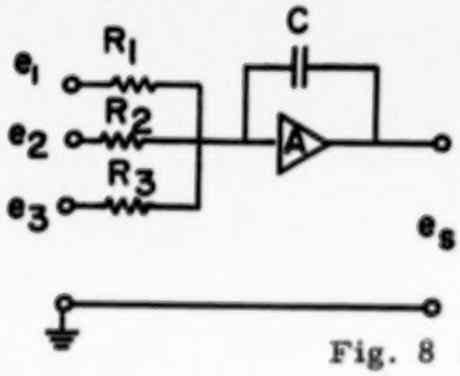

$$e_s = -\left[\frac{1}{R_1C}\int e_1 dt + \frac{1}{R_2C}\int e_2 dt + \frac{1}{R_3C}\int e_3 dt\right]$$

Fig. 8 Summing Integrator

Chapter B-5
PATTERNS OF CHANGE

I. Approach: Chapter B-5 deals with the study of systems that change with time. These systems are called dynamic systems and can be studied by using dynamic models. The concept of dynamic modeling is important because most real world situations of significance are dynamic in nature.

The chapter begins with the discussion of the importance of dynamic systems and how they can be used for prediction. Then the study of signals (physical data) generated by dynamic systems are analyzed. This leads to the realization that many man-made systems may be represented by the same signal. One of the most important signals is the sinusoidal signal, which is discussed in detail.

This chapter is an extension of both Chapters B-3 and B-4. In B-3 there is a brief discussion of dynamic models and B-4 is a study of a specific dynamic model. Chapter B-5 shows that dynamic models are applicable to most real world systems. The study of dynamic systems also further develops the overall theme of Part B (decision-making) by showing that real world problems can be solved with dynamic models.

II. Outline: Some of the material in Chapter B-5 is optional. The essential sections needed to give continuity to the text are sections 1, 3 and 4.

Section 1 - The Importance of change:

This introduction to Chapter B-5 sets the stage for the study of signals which change with time. The importance of change is illustrated by many examples from everyday life. Although the central theme is changing signals, there is a brief discussion of the relationship between probability and the sending of information.

Section 2 - Prediction:

This section illustrates the use of changing signals for prediction via two examples. They are:

(A) U.S. solid waste disposal problem.
(B) Evolution of a new product.

The first example illustrates the use of a system signal for prediction merely by extending the signal into the future. The second example illustrates a somewhat different use of system signals for prediction: if we know the dynamic behavior of the system in the past, we can predict the behavior in the future under similar circumstances.

Section 3 - Types of Signals:

The development of a model for the automobile ride has a two-fold purpose:

(A) To show how a simple model can be made from a complex system and still retain the basic characteristics of the system.

(B) To serve as an introduction to the study of oscillatory motion and sinusoidal signals.

Section 4 - Sinusoidal Signals:

This section deals with the nature of simple harmonic motion. This type of motion occurs whenever a mass departs from its rest position and is restored to its original position by a force which must be proportional to the displacement.

Several important properties of sine waves are discussed. They are:

(A) amplitude
(B) frequency
(C) phase
(D) sum of sine waves

The section ends with a discussion of other origins of sine waves (e.g. musical notes)

Section 5 - Signals Related to Sinusoids:

Sinusoids are important because they occur during the normal operation of various systems. They are also significant because many signals of importance are derived from sinusoids. The first idea will be developed further in Chapter B-6, while the main concern of this section is the second concept. Radar and sonar are examples of signals that are derived from sine waves.

Section 6 - Conclusion:

This section starts with the two main reasons for studying the sinusoid as an example of dynamic signals. It then goes on to point that not all signals are sinusoids via three examples. The section and chapter ends with three brief questions indicating some uses of sine signals.

Section 7 - Appendix A - The Environment

Chapter 1 of "A Strategy for a Livable Environment," the report by the Task Force on Environmental Health and Related Problems to the Secretary of Health, Education and Welfare.

III. Objectives:

1. To develop the realization that most of the interesting and worthwhile situations in life are the ones that change with time.
2. To introduce the concept of dynamic modeling as a tool for the study of dynamic systems.

3. To illustrate to the student that one of the most important outcomes of studying dynamic systems is the ability to predict the future behavior of a system.

4. To show how the engineer, by reducing a system to its most elementary model is able to make predications based on this model which will approximate the actual performance of the system being modeled.

5. To show that sometimes many real world dynamic systems have the same basic signal. In other words dynamic models of systems can be classified. In ascending order of complexity they are:

   (a) Linear extrapolation in time - the slope of the curve is constant.

   (b) Exponential growth or decay - the slope of the curve changes with time.

   (c) Oscillatory system (sinusoidal signal) - the slope of the curve changes from zero to negative to zero to positive, etc.

6. To develop the awareness that even though many dynamic systems are oscillatory in nature, there are many others with more complicated signals.

7. To have students become aware of the fact that most of the environmental problems that they read about in the newspapers are dynamic in nature and that the decision making techniques discussed in Part B are also being used in this area. (e.g. refer to appendix A)

IV. Development:

Section 1 and 2 - Importance of Change; Predictions

A brief class discussion should be enough to get students to realize the significance of studying changing signals. It might be helpful to have students read this section (Section 1) before class discussion. The idea that the amount of information contained in a message depends on the probability of that message can be gotten across by assigning the problem which follows section 1.

The slightly changed phase "An example is worth a thousand explanations" is appropriate for the development of the introduction to the study of dynamic systems. The first example in Section 2 can be used to really get across one of the most important reasons (Prediction) for studying changing signals. The U.S. solid waste example illustrates the importance of prediction. Via the following two techniques the amount of solid waste in 1980 is predicted:

(A) graphical analysis (extension of curve)
(B) algebraic analysis (exponential)

The second example in Section 2 is another illustration of studying dynamic systems for the purpose of prediction. Some of the more important reasons for studying profit-loss signals are:

(A) management can have objective criteria for making decisions.

(B) management can detect un-anticipated deviations from normal performance

(C) Understanding of the data is the basis for logical decisions about where to focus the investment of resources.

Section 3 - Types of Signals:

(A) A complete lesson should be devoted to the development of the automobile ride model. To capture the students attention use the mass-spring demonstration model from AMF. More detailed use of this piece of equipment will come in the next chapter.

(B) Make sure to emphasize each step in the simplification of the model (from car ride to mass-spring system).

(C) Hanging different weights on a spring and measuring the amount of elongation might help to explain Hooke's Law.

(D) The end of this section which deals with the signal generated by the model should be used as an introduction to Section 4.

Section 4 - Sinusoidal Signals:

(A) The discussion of the signal generated by a mass-spring system (end of Section 3) can be used as an introduction to the more detailed study of simple harmonic motion.

(B) Demonstration: Use a long spring (e.g. slinky) on the floor outside your room to generate sine waves which may be helpful in giving students a physical example of sine waves. The ideas of amplitude and frequency can be demonstrated at the same time.

(C) Two laboratory experiments should follow the study of this section:

(1) Wave forms produced by the signal generator (Exp. 28).

(2) Pictures of other electrical signals and sound waves on the CRO (Exp. 29).

(D) The important properties of sine waves should be summarized for students. They are:

(1) amplitude - displacement of mass

(2) frequency - cycles/sec (now referred to as hertz)

(3) Phase - position on sine wave.

(4) Sum of sine waves of a given frequency is another sine of the same frequency.

Section 5 - Signals Related to Sinusoids

Modification of sinusoidal signals is the central theme of this section. Two examples are developed in great detail:

(A) Radar signal: a burst or pulse of sinusoids for a short duration.

(B) Bat's acoustical signal (form of sonar): a pulse of sinusoids of continuously varying frequency.

Since this section is a quantative development of the above ideas, unless ample time is available for full development of the ideas, the section should be omitted. (Application of optimization to curriculum planning). On the other hand, the students may find this section quite interesting, so here are some teaching tips:

(1) Make sure that the four uses of radar for sensing and determination are developed showly with sample problems.

(a) Range

(b) Azimuth angle

(c) Elevation angle

(d) Rate of change of range.

(2) An experiment which uses the principle of the sonar is "Sound displacement transducer".

(3) Section 5 will take at least two or three periods.

Section 6 - Conclusion:

(A) Except for the first few pages of this section where the importance of studying sine waves is summarized, the section can be considered optional.

(B) Most of the material is qualitative in nature and covers three main ideas.

(1) Nature and importance of sine waves.

(2) Not all signals are sinusoids.

(3) Other uses of sine waves.

Appendix A may be assigned for home reading to give students an example of how systems engineering is being applied to social problems.

V. Answers to Questions

1. Use the data from figure 1 of section 2 to predict the solid waste production in the year 2000.

Answer:

(A) Graphical solution

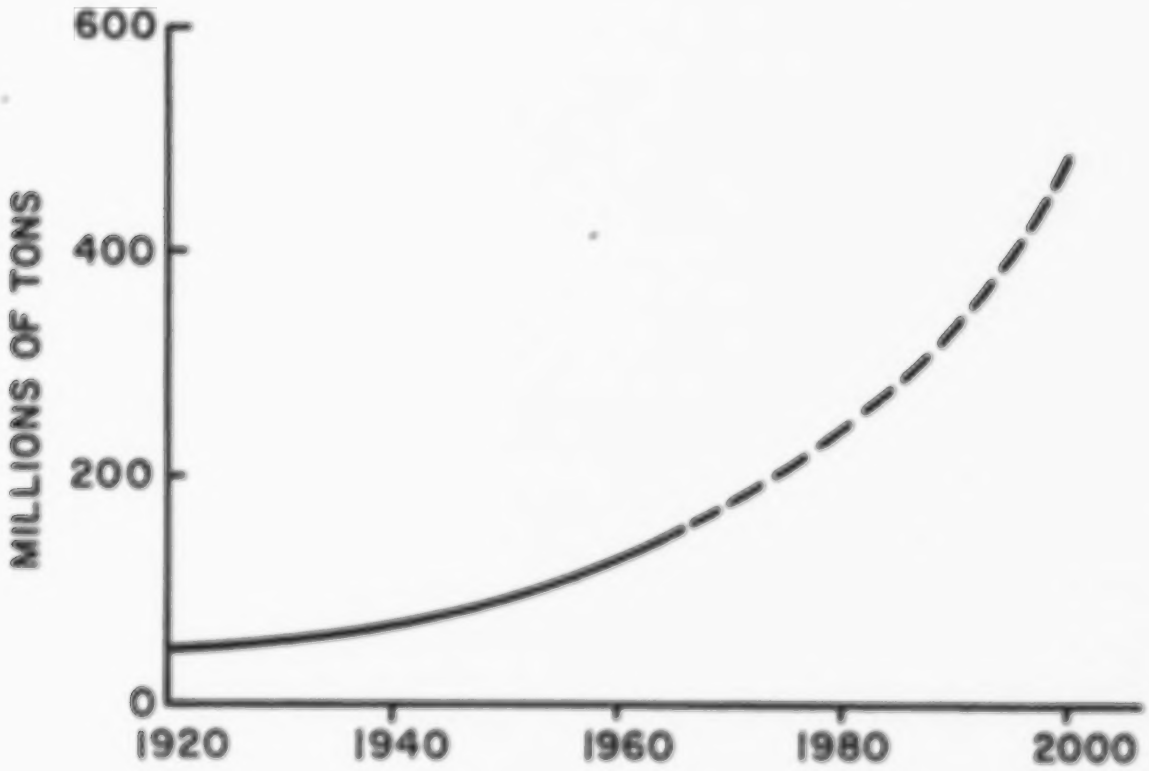

In the year 2000 there will be approximately 480 million tons of solid waste.

(B) Algebraic solution:

$y = A\,(3/2)^{t/12}$ $\qquad$ $A = 100$, $t = 50$

$y = 100\,(3/2)^{50/12} = 100\,(3/2)^{4.1} \approx 520$ million tons.

The prediction is as valid as the model.

2. Use figure 5 from section 2 to answer the following questions:

(A) Why is there no profit for over three years?

Research and development costs are high during the early stages.

(B) What is the significance of t_A?

At time t_A the first sales are made.

(C) Why is it important to minimize t_B?

Time t_B is the time needed for full production and sales. The shorter t_B is the longer the life of the product.

3. Why is the problem of a car bouncing on a bumpy road being studied in this chapter?

The reasons for studying the automobile ride are:

(A) It serves as an illustration of simple harmonic motion or sinusoidal motion.

(B) We can model the system on a simple analog computer.

(C) We can make measurements in the laboratory to observe changes in output as the variables are changed - i. e., stiffer springs or more mass.

(D) In the next chapter, we wish to consider similar problems in greater detail.

4. (A) Graph of force vs. elongation

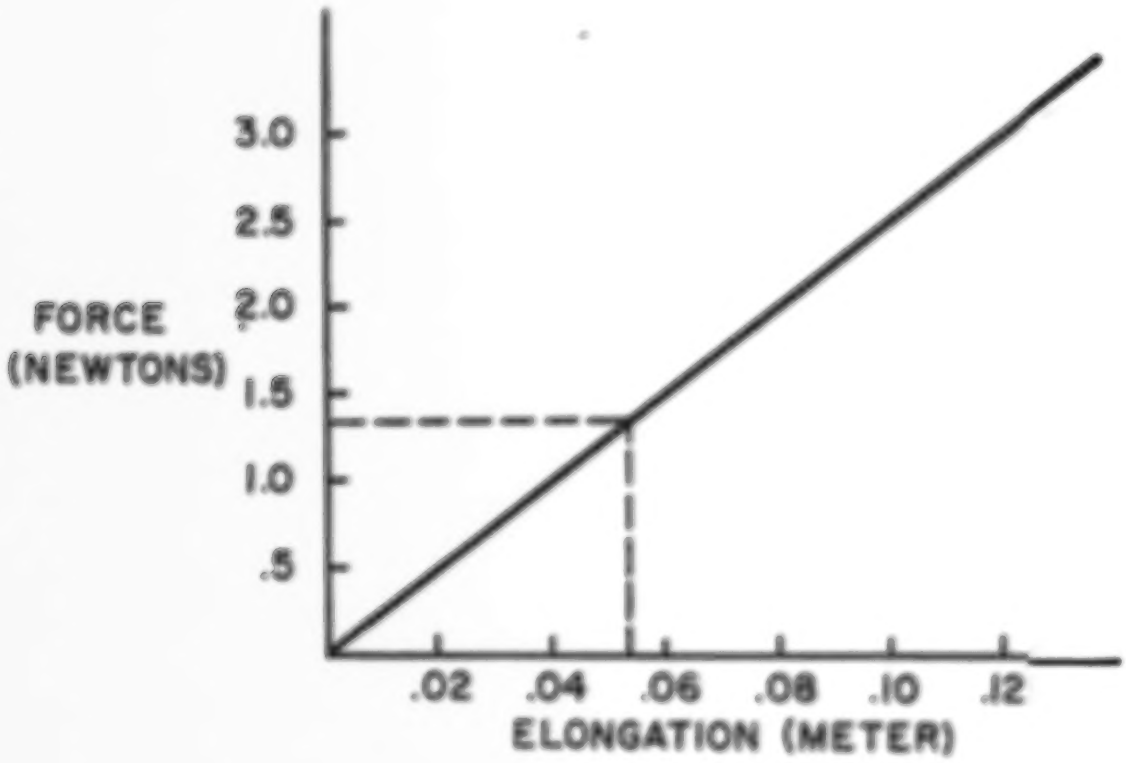

(B) $k = \Delta f/\Delta d = \frac{1}{.04} = 25$ newtons/meter

(C) If f = 1.3 nt. d = .052 meters
If f = 4 nt. d = .16 meters (if spring stretches that far without exceeding the elastic limit).

5. (A) frequency $= \frac{1}{\text{period}}$

(B) $f = 1/T = \frac{1}{1/20} = 20$ cycles/sec

6.

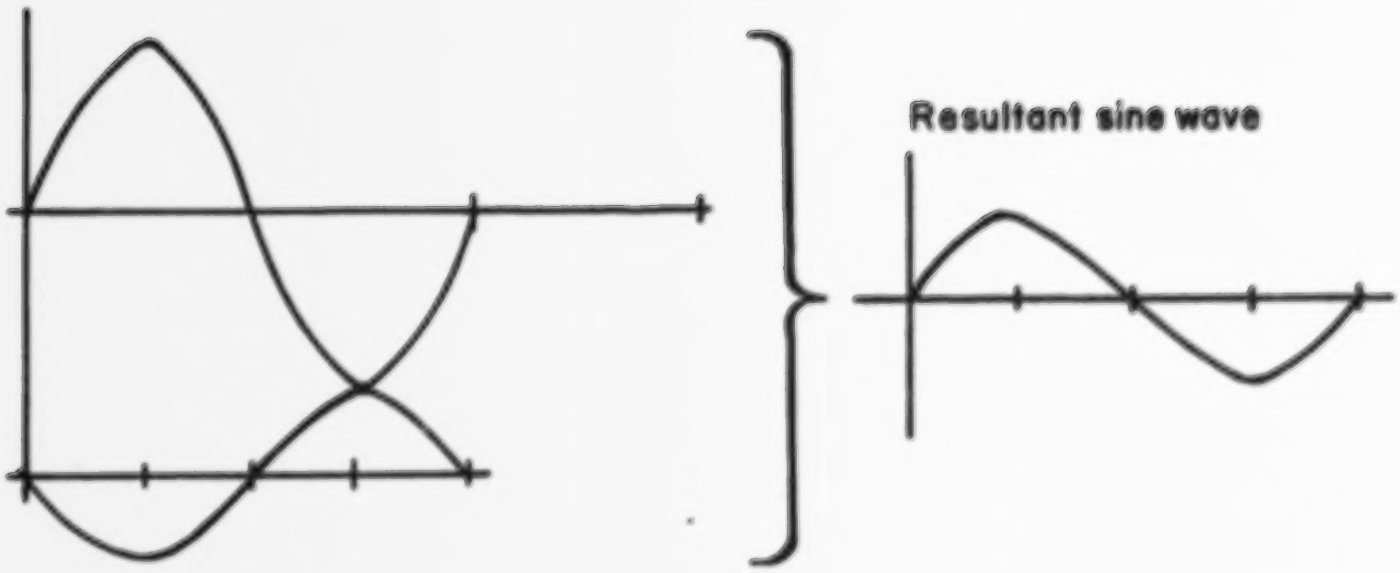

7. Maximum target range = 100 miles
Radar signal travels 10.75 micro sec/mile

(A) Calculation of minimum time

$$t_{min} = 10.75 \times 10^{-6} \text{ sec/mile} \times 100 \text{ mile}$$

$$t_{min} = 1.075 \times 10^{-3} \text{ sec/pulse}$$

(B) Calculation of maximum speed of rotation

$$\text{total time} = 7200 \text{ pulses/rev } (1.075 \times 10^{-3} \text{sec/pulse})$$

$$\text{total time} = 7.74 \text{ sec/rev}$$

$$\text{speed of rotation} = 1/7.74 \text{ sec/rev} = .13 \text{ rev/sec}$$

8. (A) Calculation of time for radar to return from the moon. Assume that the average distance to the moon is 240,000 miles.

$$t_{moon} = \frac{2\ (240,000) \text{ miles}}{186,000 \text{ miles/sec}} = 2.58 \text{ sec.}$$

(B) Calculation of time for radar to return from Venus. Assume that the distance to Venus when it is closest to the earth is (25.7×10^6 miles)

$$t = \frac{d}{v} = \frac{51.4 \times 10^6 \text{ miles}}{.186 \times 10^6 \text{ miles/sec}} = 276 \text{ sec.}$$

9. This is basically a problem using the equation for the Doppler shift.

Given: $f = 3 \times 10^9$ cycles/sec (hertz)

$V_r = 80$ miles/hr

$$\Delta f = f\, 2V_r/c = \frac{3 \times 10^9\ (2 \times 80)}{186,000\ (3,600)}$$

$\Delta f = 716$ hertz

For $\pm$ 2% accuracy in speed the Δf can vary from 0.98 (716) to 1.02 (716)

$\therefore$ 702 hertz to 730 hertz

or $\pm$ 14 hertz

For 2% accuracy at $f = 3 \times 10^{10}$ hertz the range can be from 7020 to 7310

For 2% accuracy at f = 300 hertz the shift in frequency: $\frac{3 \times 10^2}{3 \times 10^9} = \frac{x}{14\ \text{hz}}$

$\therefore x = 14^{-7}$ hz

or an accuracy of 1.4 parts/million

10. (a) distance = 18 feet

$$t = \frac{2d}{v} = \frac{36\ \text{feet}}{1100\ \text{ft/sec}} = 0.033\ \text{sec}$$

(time delay)

(b) Since speed of sound is about 1100 ft/sec, in 0.1 second sound travels 110 ft. Therefore the maximum range is approximately 55 ft.

(c) $$\Delta f = f\frac{2v_r}{v_s} = \frac{3 \times 10^4\ \text{hz}\ (2\ 10\text{ft/sec})}{1100\ \text{ft/sec}}$$

$\Delta f = 545$ hz/

$\therefore$ Received freq = 30,000 + 543 = 30,545 hz.

11. A changing frequency is used so that the bat can recognize the echo from his own signal. The frequency change also could permit the bat to recognize precisely which part of the transmitted pulse generated a particular part of the echo.

VII. References:

1. An article in Fortune magazine discusses the use of modern prediction techniques in planning for the future.

"The road to 1977" January, 1967.

2. More detailed discussion of simple harmonic motion and sinusoidal signals can be found in most physics textbooks. A good one on the high school level is:

   Physics by Alexander Taffel.

3. "Similarities in wave behavior" by Dr. John N. Shive

   This booklet explains the use of the wave machine developed by Dr. Shive. If the machine is not available, a PSCC film on waves demonstrates the use of the Shive machine.

Chapter B-4

DYNAMIC MODELS

I. Objectives and Prerequisites

A. Objectives

1. To introduce the concept of dynamic modeling.

2. To introduce the concept of a cyclic process.

3. To show how the engineer by reducing a system to its most elementary form is able to predict its characteristics.

4. To illustrate that by refining an elementary model, predictions based upon its performance will approximate the actual performance of the system being modeled.

5. To show the importance of natural frequency in the Man-Made World.

6. To discuss the amplitude response-excitation curve and its applications.

B. Prerequisites

1. The pupil should be familiar with the units of measurement introduced in Chapter B-3.

2. The pupil is expected to be versed in the principles of algebra and the arithmetic processes associated with the solution of simple equations.

II. Major Ideas

A. This chapter deals with the mechanism of change so that models may be constructed to yield data which will be the basis of predictions that will be valid for a period of time.

B. Classification of dynamic models

1. In ascending order of complexity

a. Linear extrapolation in time - the slope of the curve is constant.

b. Exponential growth or decay - the slope of the line changes with time.

c. Oscillatory system - a cyclic process - the slope of the curve changes from zero to negative to zero to positive etc.

C. In dynamic models, a model of how change occurs is required.

D. Modeling the automobile ride

1. A complex system is analyzed by considering the mass of the car as one lump, the suspension system as a spring, the bumps in the road as input and the deflection of the car as output.

   a. Bold idealization such as this enable the engineer to solve very complex problems.

2. Forces exerted by the spring on the mass follow Hooke's Law $F = -ks$

3. The bumps on the road are considered to be a series of "elemental" bumps. By studying the effect of one bump, the total effect of all bumps can be determined by the process of addition. (The superposition principle)

E. Simple Harmonic Motion (Sinusoidal Motion)

1. Amplitude is defined as one-half of the total excursion.

2. Frequency is defined as the number of oscillations per second.

F. Natural Frequency

1. Defined as the frequency at which a mass will vibrate or oscillate when abruptly excited and then left free.

   a. Natural frequency (f_o) can be calculated from $f_o = \frac{1}{2\pi}\sqrt{\frac{k}{m}}$ where k is the spring constant and m is the mass.

2. When a mass is excited at a frequency equal to its natural frequency, the amplitude of the output or response is many times greater than the amplitude of the input. This magnification of the input is known as resonance.

G. The Amplitude Response-Excitation Curve

1. Regions of the chart.

   a. Ratio of input to natural frequency < 1
   b. Ratio of input to natural frequency $= 1$
   c. Ratio of input to natural frequency > 1

H. Damping

1. Essential to curb violent or extreme excusions of a vibrating system when the ratio of the input frequency to natural frequency approaches unity.

2. The model of the automobile suspension system can be refined to include damping.

I. Multiple Resonances

1. Vibrating systems may oscillate in several ways or modes, and different modes may be driven into resonance independently.

   a. The lowest natural frequency is known as the fundamental or first harmonic.

   b. The next frequencies are known as the second harmonic or the first overtone, etc.

J. Resonance

1. May result in violent agitation of a system and its destruction.

   a. The designer must be careful to avoid designs which will be subjected to frequencies near their resonance frequency.

2. May result in desirable outcome as in

   a. Musical instruments
   b. Electronic devices such as radio, T.V., etc.
   c. Frequency gauges
   d. Clocks & watches

III. Text Divisions

A. Sections

1. Introduction
2. Modeling the automobile ride.
3. A study of the mass-spring model.
4. Road waviness as input, car motion as output.
5. The effect of damping.
6. Calculation of Natural Frequency
7. Multiple resonances.
8. Undesirable effects of resonance.
9. Uses of resonance.
10. Summary

B. Laboratory Placement

1. Student Laboratory Experiments

   a. Depending on the placement of the experiments with the text material, a short developmental lesson should precede the experiments.

b. Following the experiment and the student report, discuss the following problems:

Part A, 5-8
Part B, 5 & 6
Part C, 5a & b

2. Design of Dynamic Systems: After Fig. B-4.26 (Skyscraper)

Part A: One laboratory period*
Effect of spring rate on vehicle ride characteristics.

Part B: One laboratory period*
Effect of damping on vehicle ride characteristics.

Part C: One laboratory period*
Determination of optimum damping coefficient.

3. Relation of Mass-Spring Characteristics to Pendulum Characteristics

A. Determination of the relationship between the period T of a mass-spring pendulum and the mass of the bob and the spring force constant k T d $\frac{M}{k}$. Set up a mass spring pendulum. Measure periods for 10 oscillations; fill in the table below.

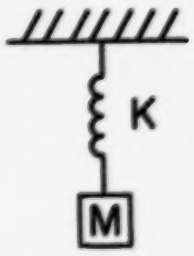

(A)

M	k	T
0.5 Kg.	1k	
1.0 Kg.	1k	
1.5 Kg.	1k	
2.0 Kg.	1k	
2.5 Kg.	1k	

Plot T vs. M at constant k

B. Measure periods of ten oscillations; fill in the table below

(B)

M	k	T
1.0 Kg.	1.0 k	
1.0 Kg.	1.5 k	
1.0 Kg.	2.0 k	
1.0 Kg.	3.0 k	
1.0 Kg.	5.0 k	

Plot T vs. k with constant M

*The design dynamic or mass-spring experiments may be performed after Fig. B-4.26 and during Chapter B-5. The experiments should be scheduled to suit individual time schedules.

C. Determination T vs. L for a swinging pendulum. Measure T for ten swings with various lengths.

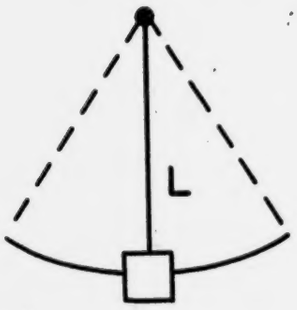

(C)

L	T
0.4M	
0.6M	
0.8M	
1.0M	
1.5M	
2.0M	

Plot T vs. L for 5° arc only.

D. If possible, show an automobile shock absorber.

IV. Demonstrations

A. Matched Tuning Forks on Resonance Boxes.

If a pair of matched tuning forks are available, the phenomenon of resonance may be demonstrated by striking one fork with a soft rubber stopper on the end of a stick. The second fork will be set in vibration. By striking the fork with a hard rubber stopper harmonics may be produced.
"Loading" the prongs of one fork with a number of heavy rubber bands or with a metal band will change its frequency and it will not resonate when the other fork is sounded.

B. Resonance in air columns can be demonstrated using a tuning fork and a glass tube as shown. Raising or lowering the tube changes the length of the air column and thus changes the mass of the vibrating material and its natural frequency.

C. Resonance can also be demonstrated by using loosely coupled pendula as shown. Use three equal or nearly equal masses and equal length supports. When the center bob is given an impulse, its vibration energy will be transferred to its neighbors, etc.

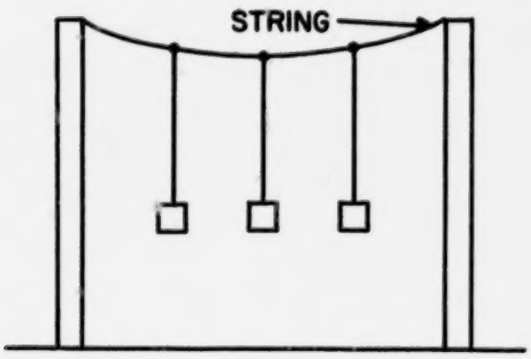

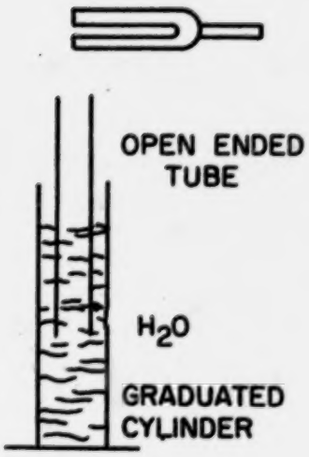

D. Problem B-4.22 can be done as a demonstration - the results are quite impressive, and can be referred to again during the study of stability in part C.

V. Homework, Quizzes, and Tests

A. Homework problems and answers.

Relative difficulty of questions found in Chapter B-4.

EASY		MODERATE		DIFFICULT
4.1	4.10	*4.3	*4.19	*4.6
*4.2	4.11	*4.9	4.20	4.7
4.4	*4.23	*4.12	*4.21	4.8
*4.5	4.26	4.13	*4.22	*4.15
		4.14	*4.24	4.18
		4.16	*4.25	
		*4.17	4.27	

*Key problem to be completed by all students.

B-4.1 A rocket which has a mass of 5,000 kg is launched with a force of 190,000 newtons. What is its initial acceleration when the resisting forces are negligible? How many multiples of the acceleration of gravity is this?

Ans. 38 m/s^2 3.9g.

B-4.2 A spaceman out in space beyond the measurable pull of any planets does does a space walk by using a gun that emits a gas jet.

(a) If his mass is 70 kg and he applies a 7000 newton of f. value force, at what rate will he accelerate? Ans. 100 m/s^2

(b) How many multiples of the gravitational acceleration on the earth will this be? Ans. 10g.

B-4.3 A man is pushing a box across the floor with a force of 200 newtons. The box weighs 98 newtons and is accelerating at the rate of 18 m/sec^2. What is the force of friction opposing the motion of the box?

Ans. 20 newtons

B-4.4 A rocket sled is accelerating at the rate of 90 m/sec^2. It is acted upon by a jet that exerts a force of 10,000 n and a retarding force of friction of 100 newtons. What is the mass of the sled?

Ans. 110 Kg.

B-4.5 You find that you can pull on a rope that is tied to a building with a force of 800 newtons. Suppose you engage in a tug of war with an equally strong opponent. What will be the force in the rope?

Ans. 800 newtons

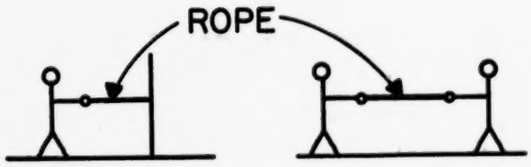

B-4.6 If the mass of a car is 2000 kg and its suspension system has an effective spring constant of 72,000 newtons, find the amplitude of the road if the road frequency is 2, 4, 8, and 10 rad/sec and the amplitude of the car is 0.01 meters. Ans. Yr = 0.009, 0.083, 0,001 m (roughly)

B-4.7 Suppose the car is going twice as fast as in Problem B-4.6. Find the road amplitude. Ans. Yr=0.083, 0.003, 0.017, 0.040m

B-4.8 If the road amplitude is 0.0089 meters and the car's amplitude is 0.01 meters, find

a. the ratio of k/M if the road frequency is 2 rad/sec. and

b. If M is 3000 kg, what is the spring constant k?

Ans. a) 90 N/m per kg b) 270,000 N/m

B-4.9 If an automobile has a mass of 1500 kg and a spring constant of 96,000 newtons/meter, what is its natural frequency in cycles/sec?

Ans. 1.3 cps.

B-4.10 You observe that the natural frequency in up and down motion of a car is 1 cps, you also know that the car has a mass of 1000 kg. What is the spring constant k? Ans. 39,400 N/m.

B-4.11 If the natural frequency of a car is 1 cps and the spring constant is 78,800 n/m, what is the mass of the car? Ans. 2000 kg.

B-4.12 If the natural frequency of the car is 2 cps and the ratio of car amplitude to road amplitude is 2.0, what is the road frequency as seen from the car? Ans. 1.4 or 2.4 cps.

B-4.13 If the ratio of car to road amplitude is 3.0 and the road frequency is 2 cps, what is the car's natural frequency? Ans. 1.7 or 2.5 cps.

B-4.14 Suppose a car is traveling over a road at 30 miles per hour (44 ft/sec) and the peak to peak distance between bumps is 22 feet. If the natural frequency of the car is 1.0 cycles/sec, what is the ratio of the car's amplitude to the road's amplitude? Ans. 0.3

B-4.15 You are traveling in a car at 60 mph (88 ft/sec). The ratio of the car's amplitude to the road amplitude is 3 to 2. How far apart are the bumps of the road spaced if the car's frequency is 1 cps?

Ans. 68 ft. or 147 ft.

B-4.16 Do Problem B-4.13 on the assumption that the damping quantity has the value $b/M\omega_n = 0.4$ (Use Fig. B-4.25). Ans. 2.1 cps.

B-4.17 Do Problem B-4.14 on the assumption that the damping quantity $b/M\omega_n = 1.0$. Ans. 0.25.

B-4.18 Do Problem B-4.15 on the assumption that the damping quantity $b/M\omega_n = 1.0$. Ans. 63 feet per bump.

B-4.19 A seismograph is an instrument for measuring the deflection of the earth during earthquakes. It consists basically of heavy mass suspended from a spring. The spring is suspended from a rigid mount which rests on the earth. The mass-spring system is a very low frequency, of the order of 1/10 cps, which is well below the frequencies of earthquakes. On the basis of Fig. B-4.21, explain how the seismograph works. Ans. The important point is that this is a mass-controlled system.

B-4.20 You find that the A string on your ukelele is about one half-tone flat, so that it is vibrating at about 830 cps instead 880 cps. When you time the string up to pitch, by what per cent od you increase the tension on the string? Ans. 12%.

B-4.21 The following data are given for the amount of sway of a radio tower when a wind of 10-second pulses hits the tower.

North wind speed - mph	Amount of sway - inches
5	1
10	1.5
15	3
20	9
25	20
30	12
35	10
40	9

a. Draw a graph of the input-output characteristics for this building.

b. What is the resonant wind speed? Ans. About 24 mi/hour.

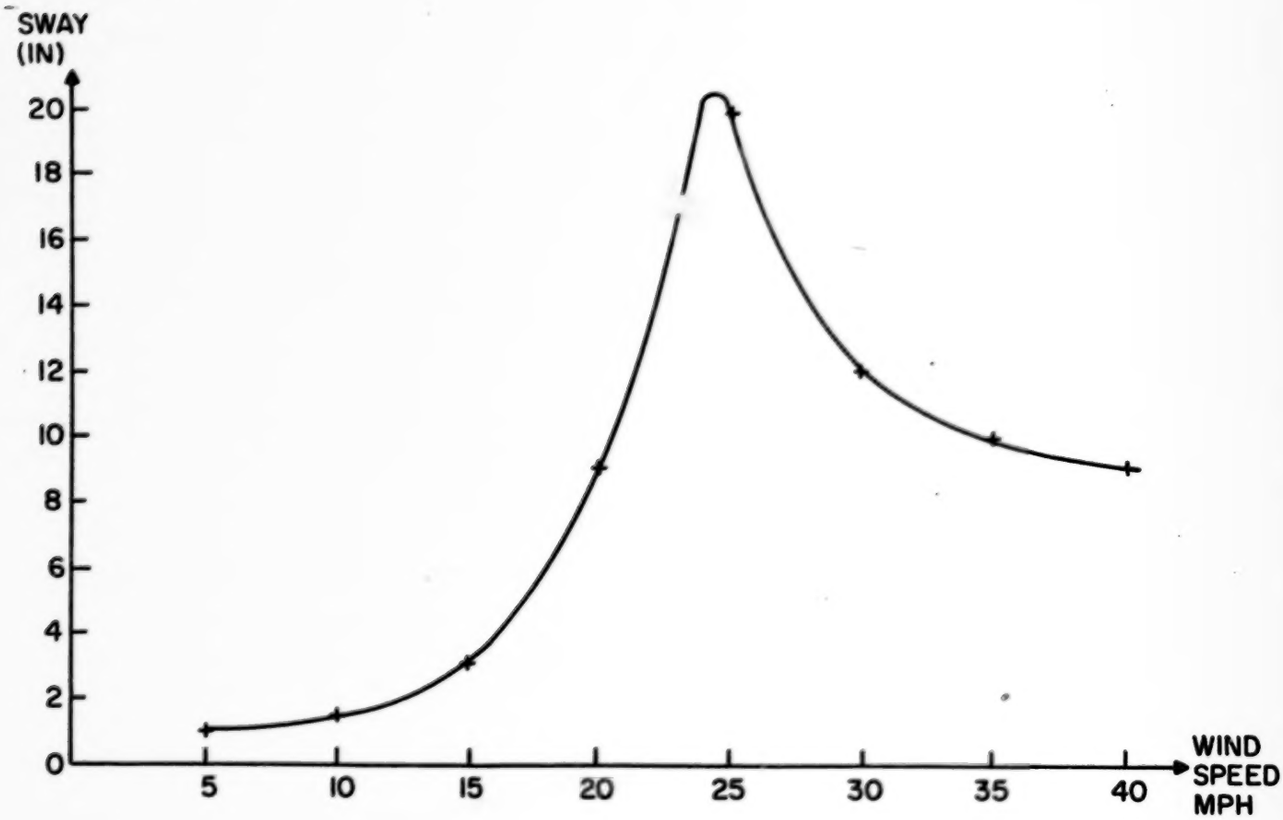

B-4.22 A large mass (history book, cement block, etc.) is hung on a length of wire from the ceiling of a room. Various people push against the mass over a period of one minute with pulses of varying frequencies but equal force. The maximum displacement of the mass is recorded for each frequency.

Frequency of pulses (Pulse/sec)	Displacement (inches)
0.2	0.5
0.5	1
0.8	8
1	4
1.2	6
1.5	18
1.7	6
2	2
2.2	1.5

a. Graph the input-output characteristic of this pendulum.

b. What is the resonant frequency of this pendulum?

Ans. about 1.48 cps.

c. If this pendulum were allowed to swing freely, at what frequency would it swing? Ans. about 1.48 cps.

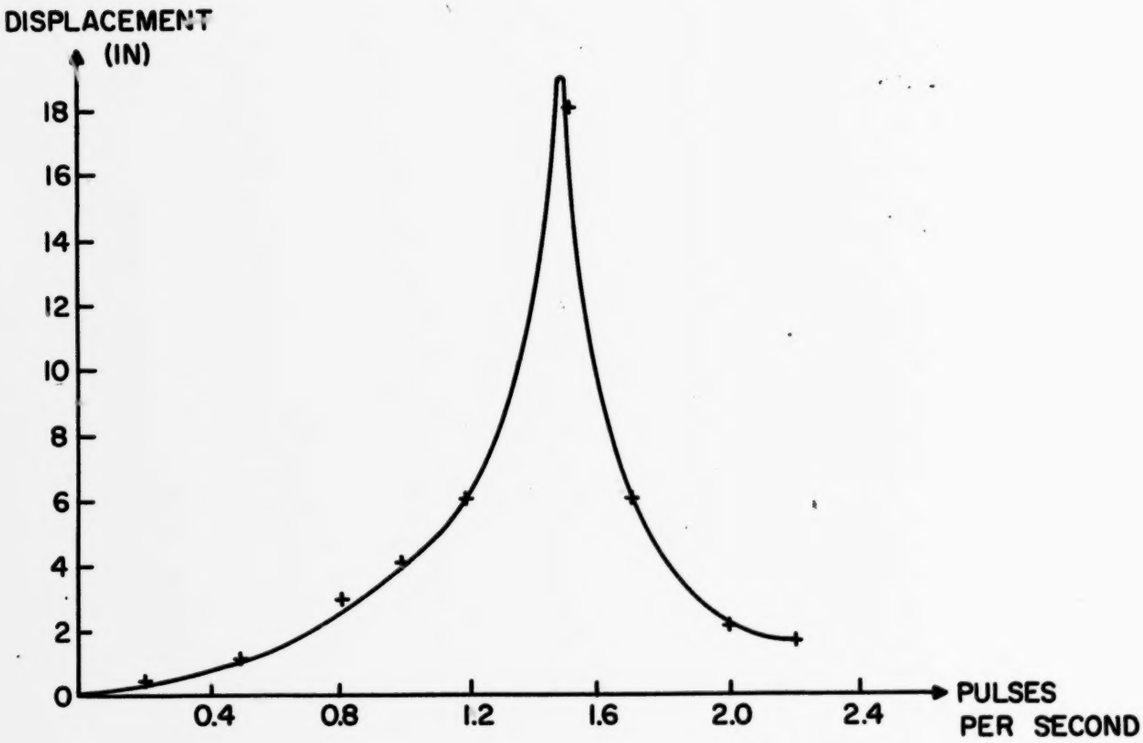

B-4.23 A string which has a natural frequency of 128 cps is made to vibrate in three parts. What is the frequency of the sound produced?

Ans. 384 cps.

B-4.24 Two strings of the same length and having the same weight are set into vibration. If the natural frequencies have a ratio of 2 : 1, what is the ratio of the tensions on the strings? Ans. 1.41 to 1.

B-4.25 At what frequency would a smoke stack 5 feet in diameter vibrate in winds of 15 mph, 20 mph, 30 mph, 45 mph, and 60 mph?

Ans. 0.97, 1.29, 1.94, 2.91 and 3.88 cps.

B-4.26 The frequency of a pendulum with a mass of 10 kg is 2 cycles per second. What will the frequency be if the mass is replaced by one of 5 kg? Ans. 2 cps.

B-4.27 What is the frequency of a pendulum 4 meters long? Ans. 0.25 cps.

V. B. Quiz and Discussion Questions.

1. (4.1) Pasteur produced a biological model to the effect that living things always must have living forerunners (not necessarily parents, because many simple organisms just divide to make two smaller copies of the original).

   a. Would you call this model explanatory or predictive or both? Explain why, but be reasonably brief.

   b. Can you point out a serious dilemma to which this model leads?

   Ans. a) Both; together with Darwin's hypothesis of organic evolution it helped explain the myriad forms of living organisms as well as the meaning of the fossil record; it predicted that living matter will never occur in a completely sterile environment. (This prediction is now sometimes doubted).

   b) How did life start on the earth?

2. (4.1) A simple example of an oscillatory system is provided by a learner on a bicycle, just before he gets the knack. Describe how oscillations arise in this system.

   Ans. He starts to fall one way, turns his wheel that way, overcorrects and starts to fall the other way, etc. to a typically wobbly course.

3. (4.2 and3) A coiled spring (like those sometimes used to close screen doors) is hung by one end from a support, and its length is measured to be 0.40 m. When a series of masses are hung in turn from its lower end, its length takes on the values given in the table:

mass		length	Δ length
0 kg	O N	0.40 m	0 m
0.. 5		0.42	
1. 0		0.45	
1. 5		0.48	
2. 0		0.51	
2. 5		0.54	

   a. Fill out the blank columns in the table.

b. Draw a graph of length (abscissa) against force (weight). On the same axes, draw a graph of change in length against force. Give a reason why the second graph may be more convenient than the first when reduced to an equation. (Note: at the bottom of each curve you find a bend, which is characteristic of tightly coiled springs; if contact between the coils did not prevent, the unstretched length would be less than it actually is. This is a useful classroom demonstration).

c. What is the slope of these graphs?

d. What is the spring constant, k, of this spring?

e. Suppose the 2-kg mass were hung from the end of this spring, and a further force of 9.8 N were applied by pulling downward on the mass. Draw a square on your paper to represent the mass, and suitable labeled arrows to represent all the forces acting on the mass, the arrowheads showing the directions of these forces. (There are at least 3). Is the sum of the forces upward equal to the sum of the forces downward? If not, think some more.

f. What is now the total length of the spring?

g. If the person applying the downward pull of 9.8 N should let go, what would be the net force acting at this instant on the 2-kg mass (give both size and direction) ?

h. What would happen to the mass (qualitative answer only) ?

i. Would the net force acting on the mass remain the same for the next very short time interval as it was in (g) ? If not, what kind of change in it would you expect, and why?

j. By the time the spring has shortened itself to 0.51 m again, how would you describe the condition of the 2-kg mass?

k. Predict the further history of this spring-mass system. Find a suitable diagram in Chapter B-4 to represent it.

l. What difference do you find between the spring-mass system of this question and that of Section B-4.3?

Ans. a)

weight	Δlength
0 N	0 m
4.9	0.02
9.8	0.05
14.7	0.08
19.6	0.11
24.5	0.14

Ans b)

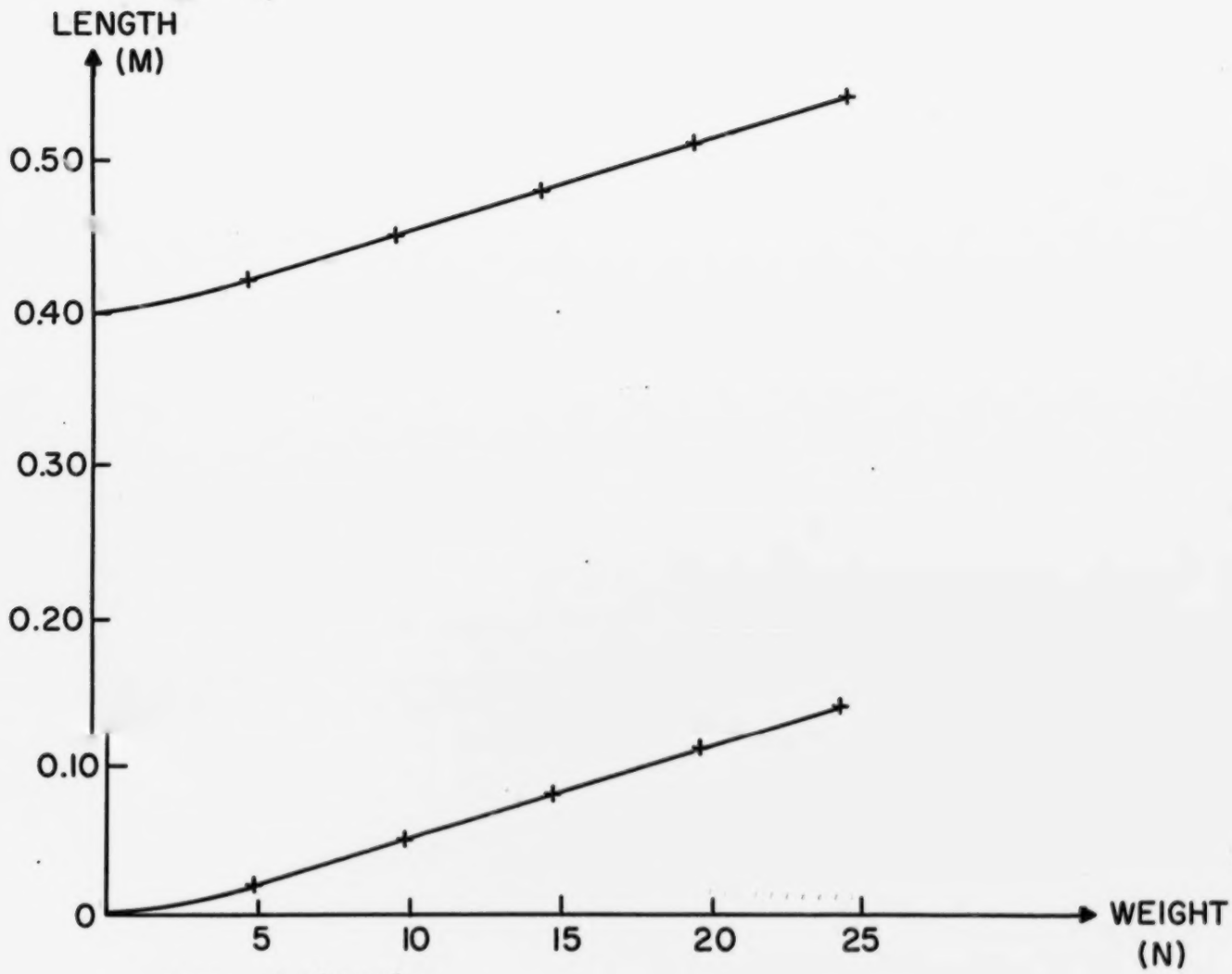

Ans. c) 160 N/m

d) 160 N/m

e)

f) 0. 57 m (if the length described by Hooke's Law has not been exceeded)

g) 9. 8 N upward

Ans. h) Acceleration upward (magnitude would be 4.9 m/s^2).

i) No, it would grow less as the spring shortened ($f = -ks$).

j) All forces now balance, but the mass has acquired velocity upward.

k) The mass overshoots the equilibrium point, but now spring force continues to shrink, and net force (= gravitational - spring) grows, pointing downward, so acceleration becomes negative and mass ultimately stops and starts down again; once more it overshoots equilibrium, etc. Fig. B-4.9 or 4.14, e.g. (but x-axis now is a time axis).

l) Here the initial force is applied to the mass and thence to the spring, whereas in the model of B-4.3 it is applied to the spring and thence to the mass, but the results are identical.

4. (4.3) Explain how the mass- spring system of Question 3, and a rubber stopper on the end of a metal rod, could be used to demonstrate the existence of the three regions of Fig. B-4.21.

Ans. Tap the mass with the stopper at a low frequency (corresponding to $f/f_o < 0$, the spring-dominant region), when the amplitude produced is small; then at increasing frequencies until $f = f_o$ and the amplitude becomes large; then at high frequencies ($f/f_o > 0$, the mass-dominant region), when the amplitude again diminishes.

5. (4.6) a) What is the natural frequency of the spring-mass system of Question 3?

b) What mass should be hung on the same spring to make a system of natural frequency $f_o = 2$ cps? 1 cps?

Ans. a) 1.4 cps

b) 1 kg; 4 kg.

6. (4.6) A Pelton wheel is a highly developed form of water wheel, with artfully shaped steel buckets which are acted upon, one after another as the wheel spins, by a very high velocity jet of water that has been piped down from a considerable height, often several hundred feet. Explain how you would model one of the buckets as a spring-mass system.

Ans. The bucket and its arm have mass, which can be lumped at one point on the end of an arm; the arm is slightly flexible and can be considered a spring. The combination might look like Fig. B-4.28.

7. (4.7) The tympani player (kettle drummer) in a symphony orchestra can vary the character of the sound produced by his instrument not only by striking hard or gently but also by varying the part of the drumhead that he strikes. Suggest a reason for the second part of the above statement.

Ans. The drumhead can vibrate in many complex patterns (more so than those of a string because it has two dimensions), and different sets of patterns can be evoked by striking in different places.

8. (4.8) In electronics work various kinds of filters may be needed. Explain what the following terms mean as applied to filters:

a. Broad band

b. Narrow band

c. High pass

d. Low pass

Ans. a) The bandwidth of the resonance curve is broad.

b) The bandwidth of the resonance curve is narrow (and tuning is sharp).

c) The resonance peak is in the high-frequency range (and is broad).

d) The resonance peak is in the low-frequency range (and is broad).

VI. Miscellaneous

A. References

1. Forrester-Industrial Dynamics

B. Film Clips

1. The film clip showing The Collapse of The Tacoma Narrows Bridge from The Franklin Miller Senes On Physics is most appropriate for use with this chapter. This is a short color film mounted in a Cartridge for use in 8 mm projectors.

C. <u>READING FOR CHAPTER B-4</u>

1. "Resonant Vibrations of the Earth," by F. Press, <u>Scientific American</u>, vol. 213, no. 5, Nov. 1965, pp. 28-37. An absorbing article about how the Earth is set into resonance by earthquakes.

D. Films For Chapter B-4

The following films, listed in the CEE publication "Motion Pictures For Engineering Education," would be useful in the study of this chapter.

Name of Film		Supplier
Approaching the Speed of Sound.		75
Mechanical Vibration		11
Shipboard Vibrations-Part I Fundamental Principles of Vibrating Systems		63
Shipboard Vibrations - Part II Multi-Mass Systems		63
Shipboard Vibrations - Part III Vibration, Exitation, and Response		63
Similarities in Wave Behavior		14
Stationary Longitudinal Waves		50
Tacoma Narrows Bridge Collapse (This is an 8mm car ridge used in a special projector)	Page	SC-1

NETWORK

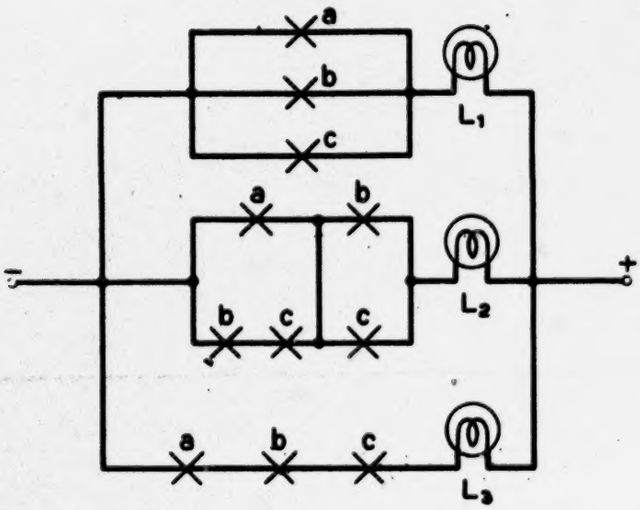

TRUTH TABLE

a	b	c	L_1	L_2	L_3
0	0	0			
0	0	1			
0	1	0			
0	1	1			
1	0	0			
1	0	1			
1	1	0			
1	1	1			

T-I LOGIC CONTACT NETWORK-I

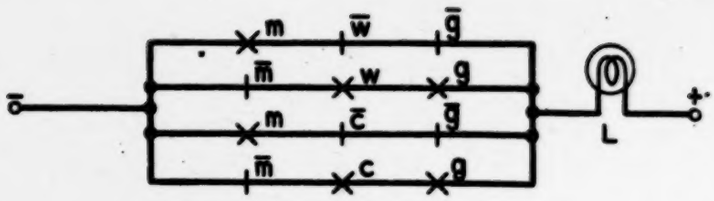

(a) FIRST FORM OF THE CIRCUIT

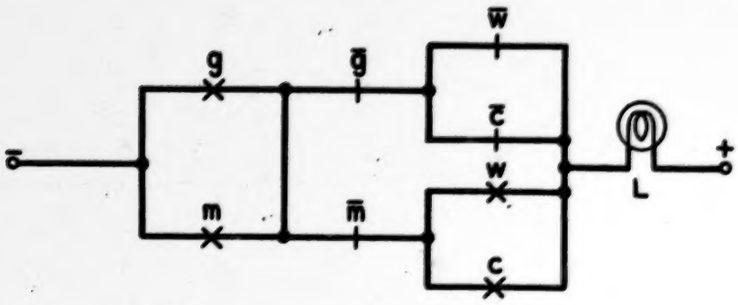

(b) ALTERNATE CIRCUIT FORM

T-2 LOGIC CONTACT NETWORK-2

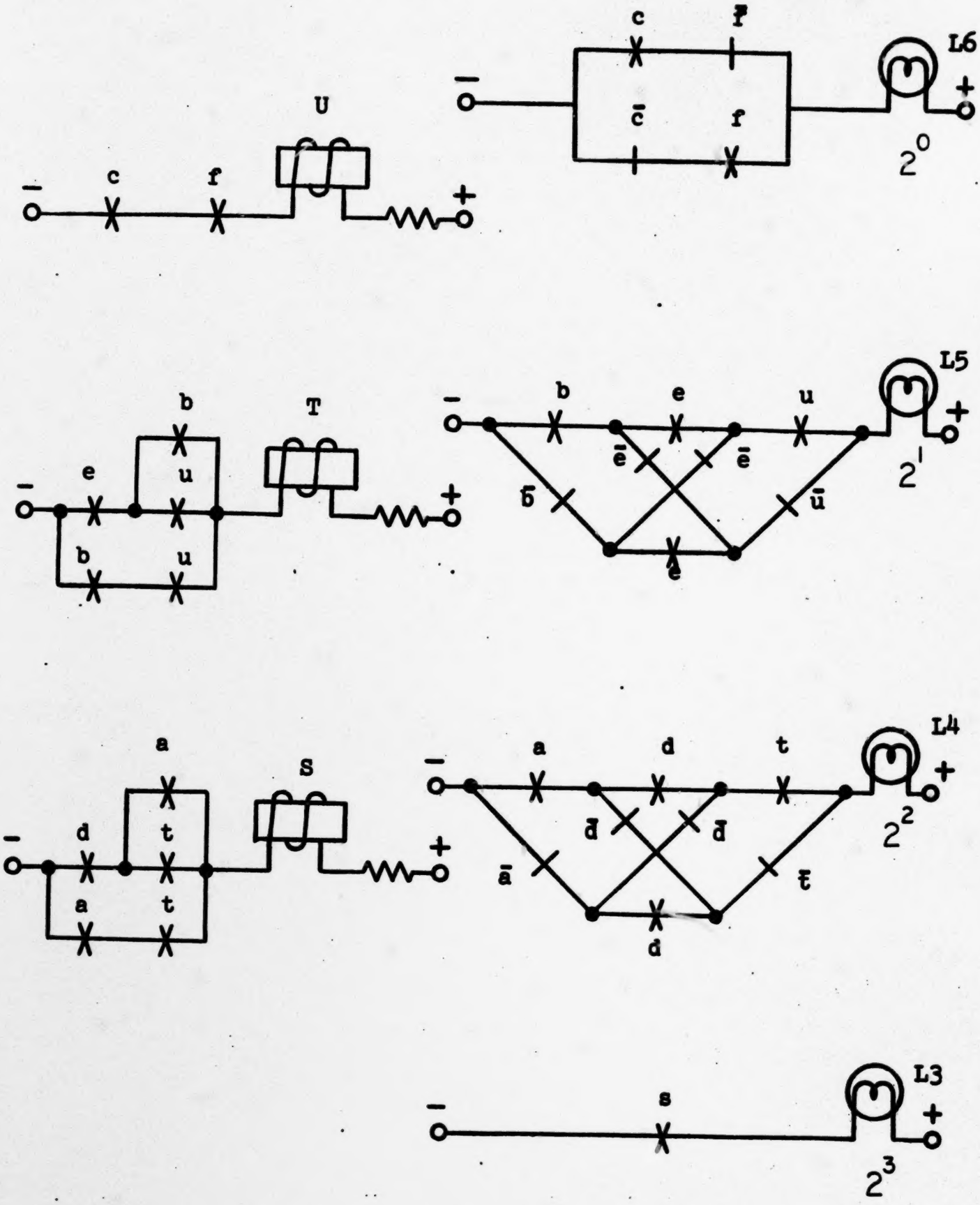

T-3 THREE DIGIT BINARY ADDER

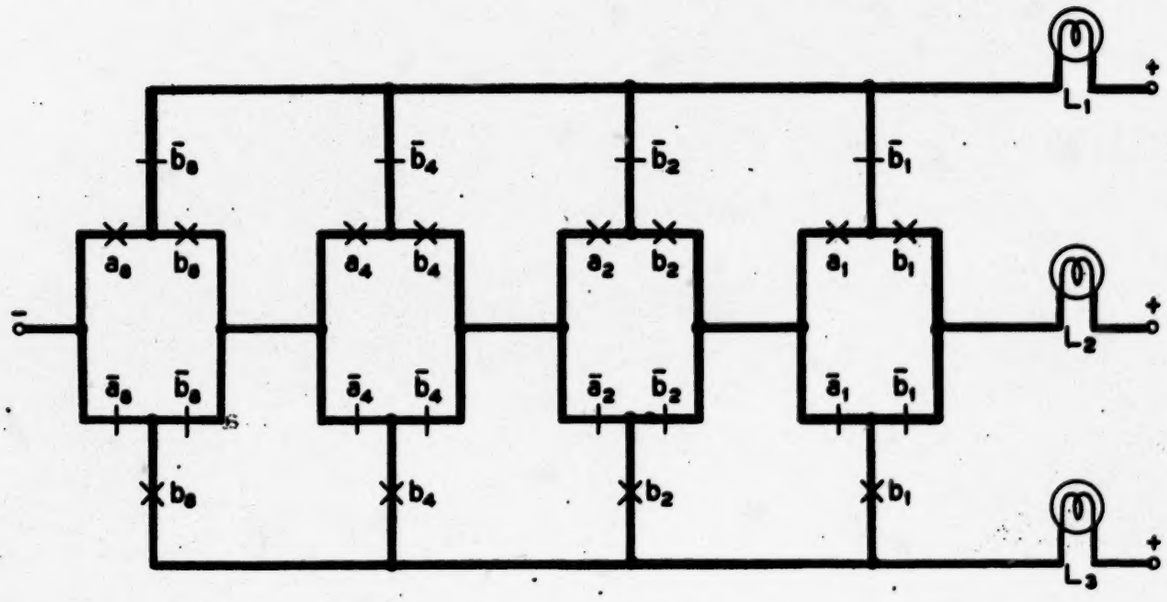

T-4 A CIRCUIT THAT COMPARES TWO-4 BIT BINARY NUMBERS

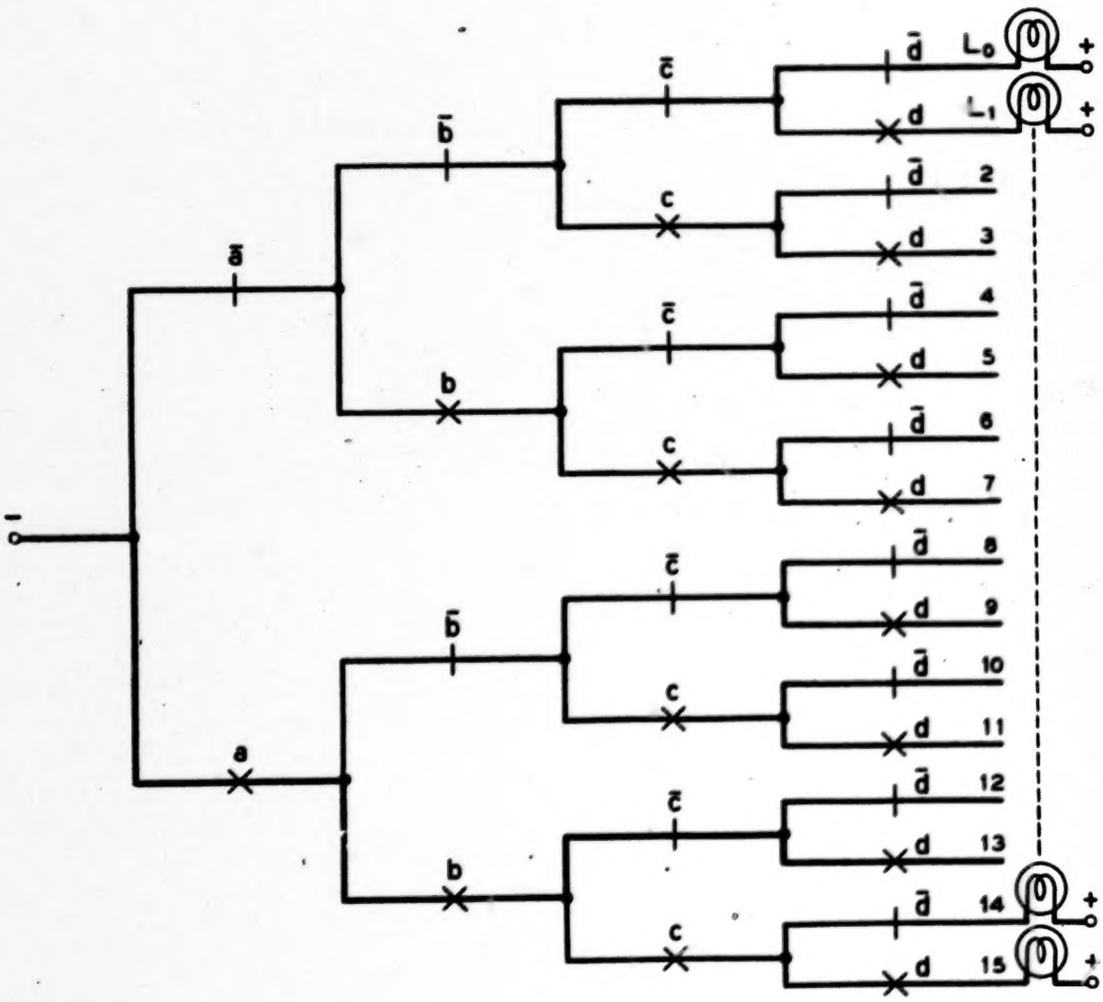

T-5 A TREE CIRCUIT

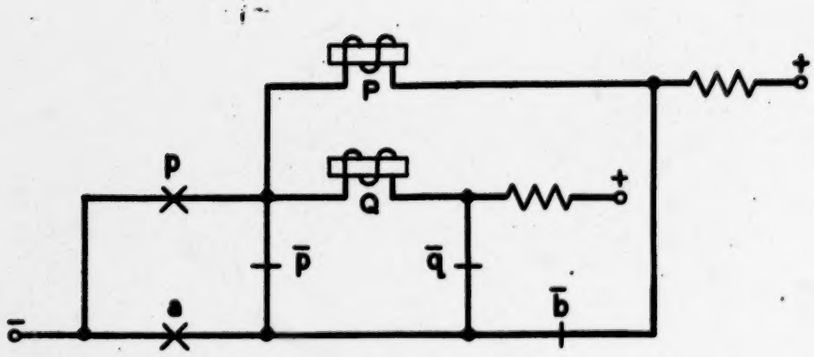

(a) CIRCUIT DIAGRAM

STEP:	1	2	3	4	5	6	7	8	9	10
A	0	1	0	1	0	1	0	1	0	1
B	0	0	0 → 1	1	1 → 0	0	0 → 1	1	1	1
P	0	0	0	0 → 1	1	1 → 0	0	0 → 1	1	1
Q	0	0	0	0	0 → 1	1	1 → 0	0	0 → 1	1

(b) A TYPICAL SEQUENCE IN THE OPERATION OF THE CIRCUIT IN (a), ABOVE

T-6 ONE STAGE OF A COUNTER

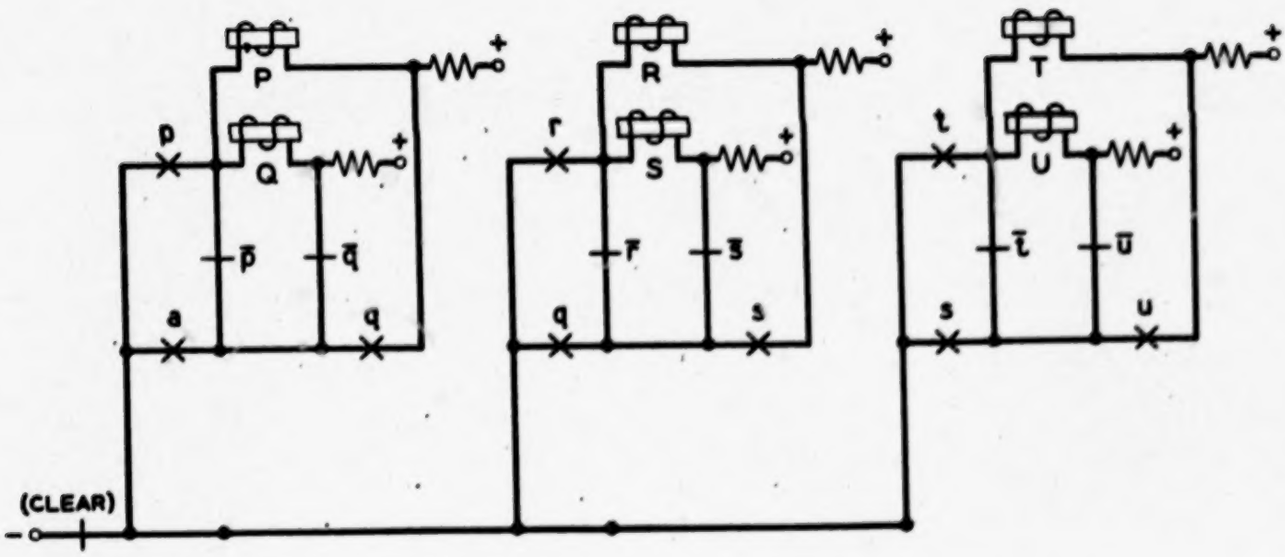

T-7 A THREE STAGE BINARY COUNTER

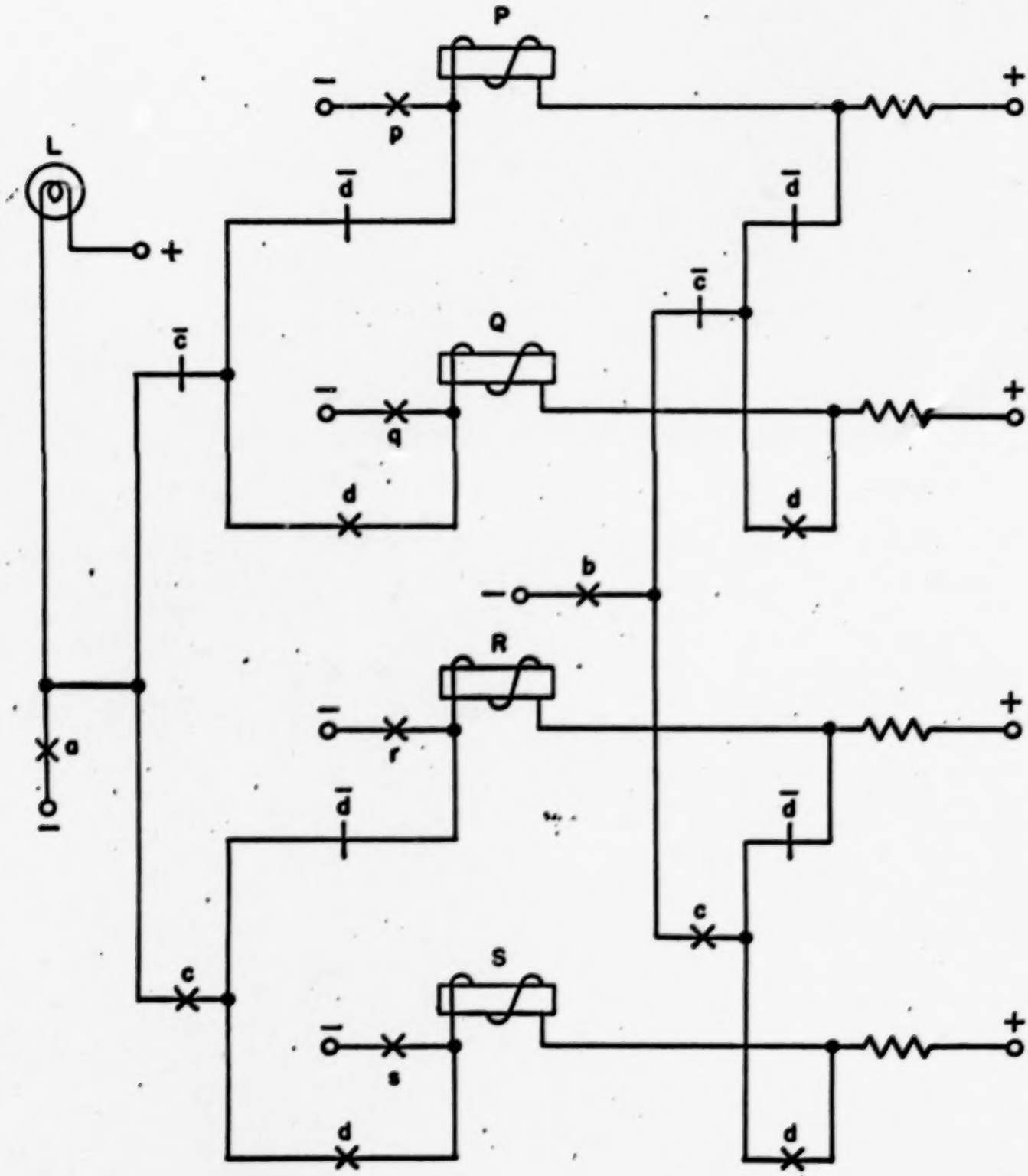

T-8 4 BIT MEMORY

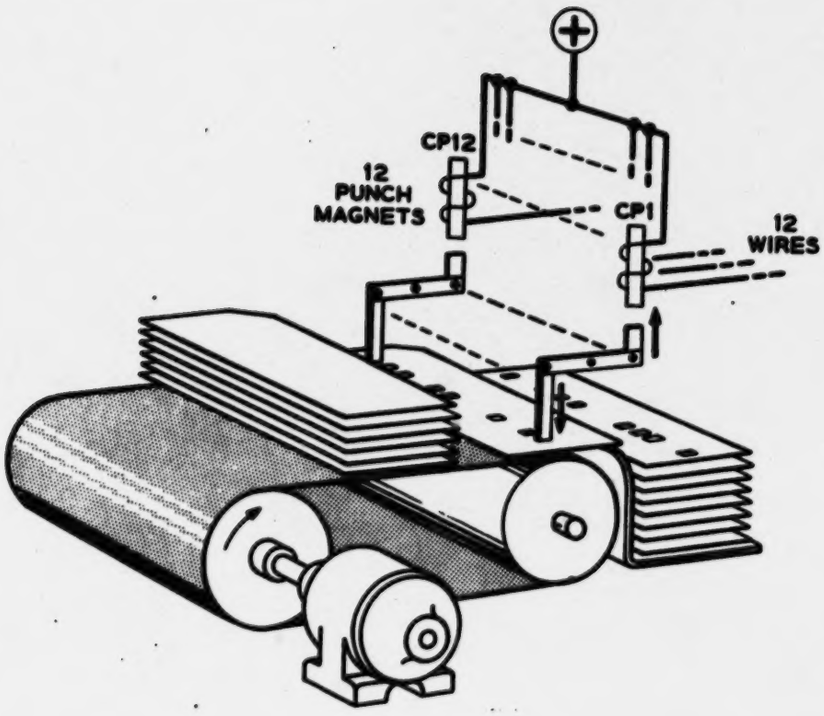

T-9.1 CARD PUNCH

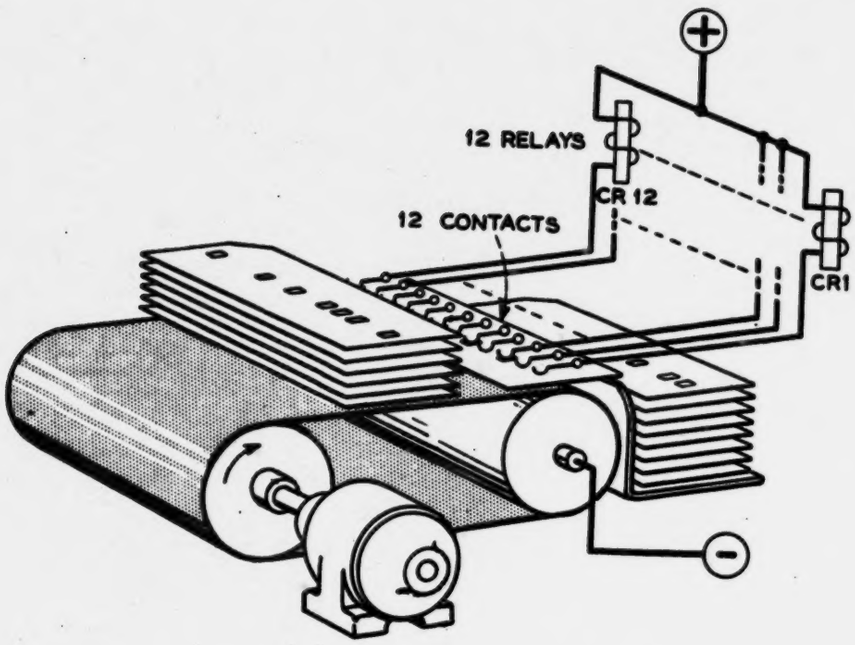

T-9.2 CARD READER

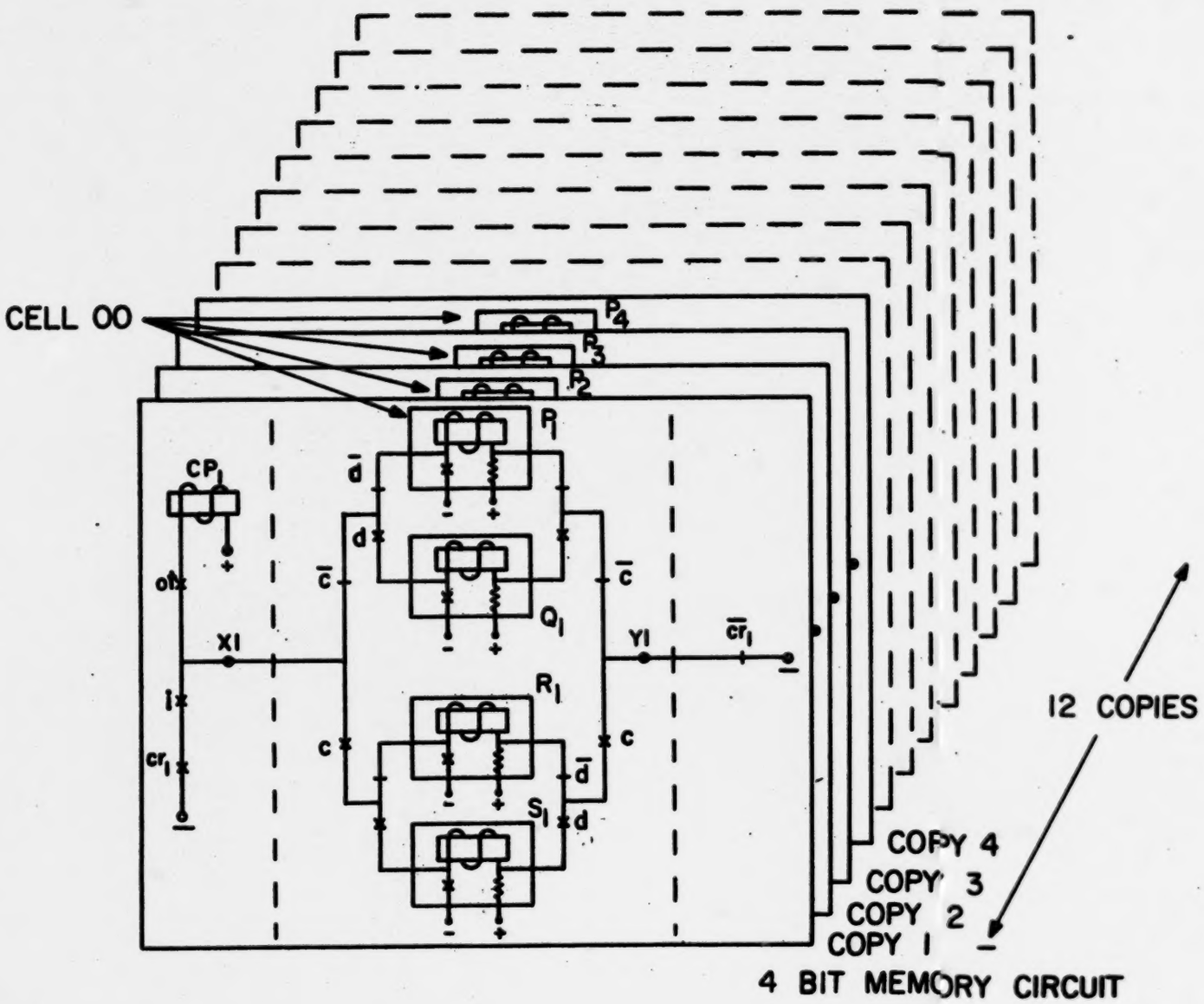

T-10 4-12 BIT MEMORY CELLS

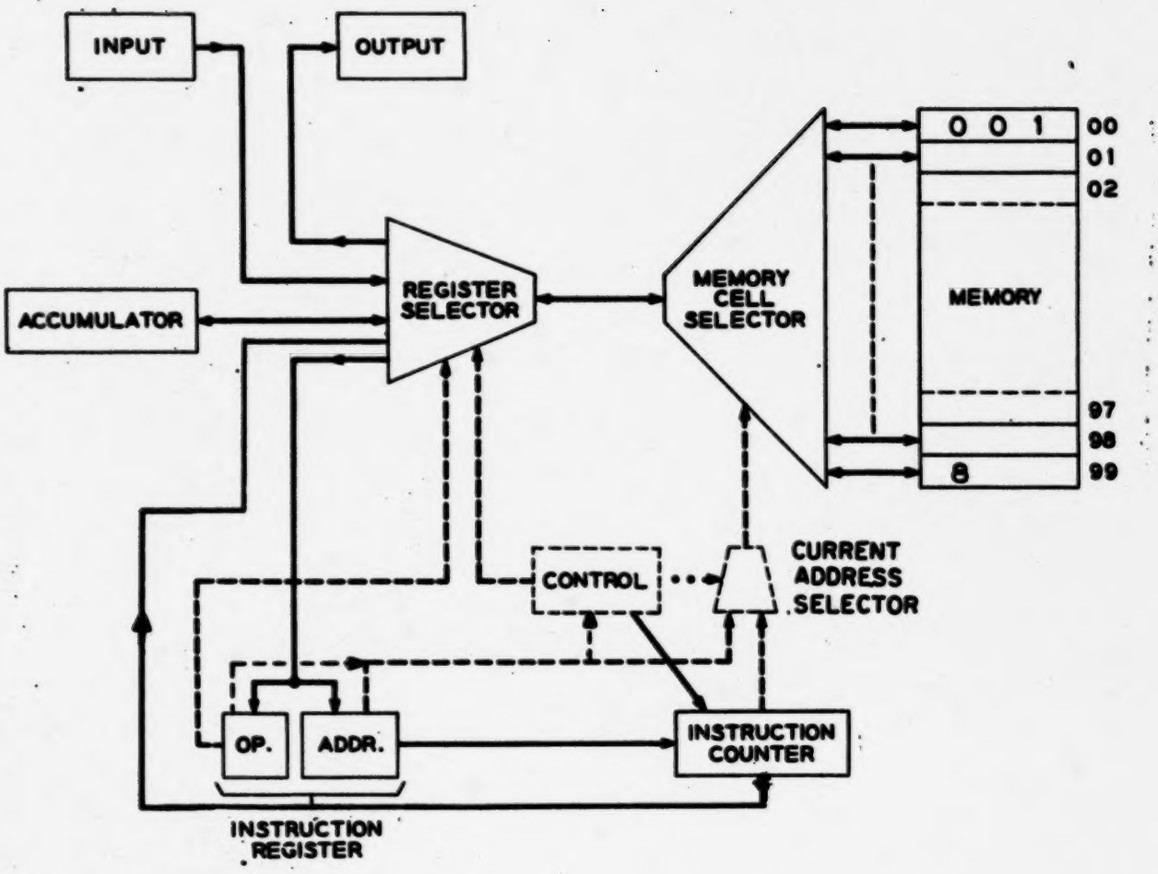

T-II BLOCK DIAGRAM OF COMPUTER

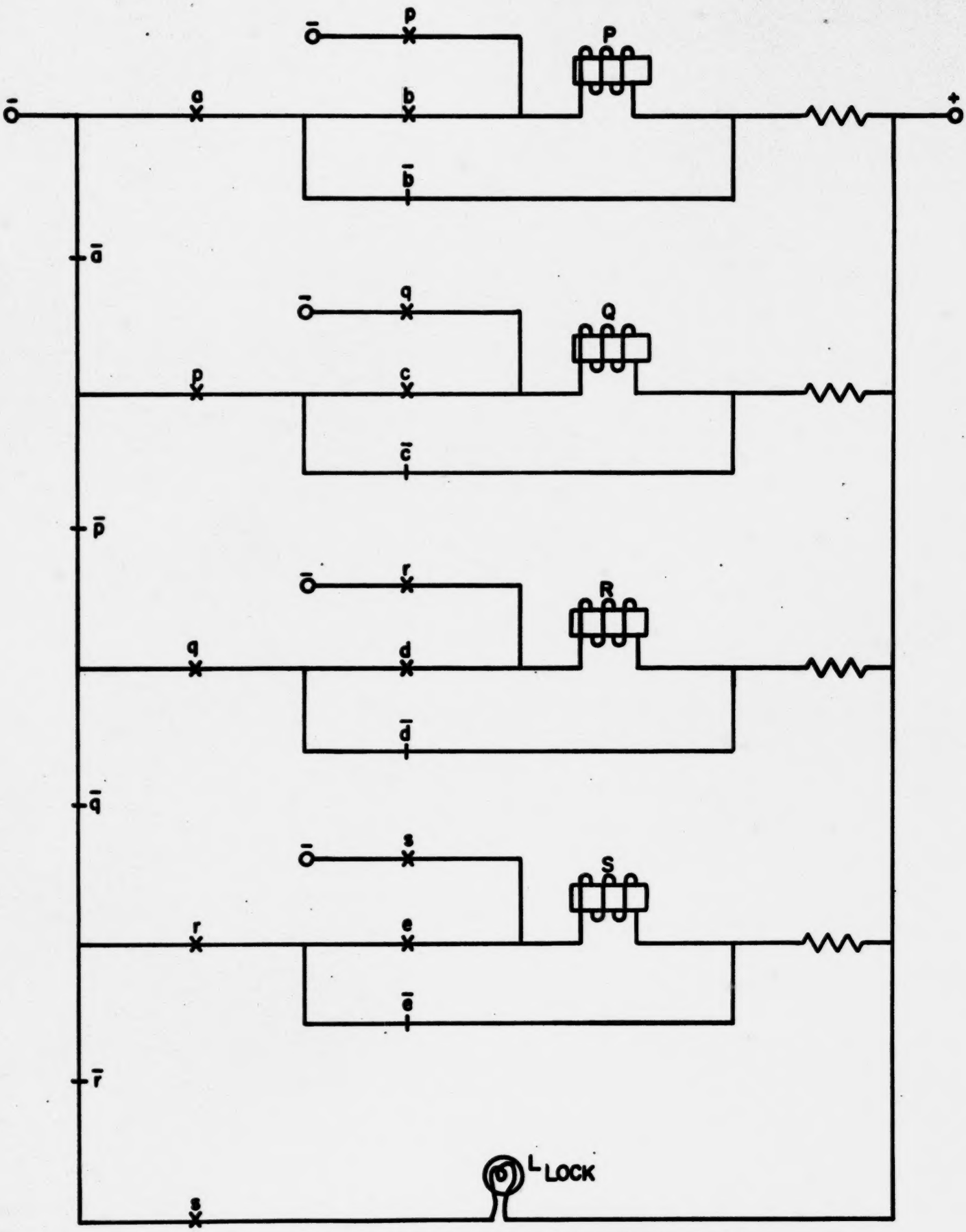

T-12 AN ELECTRICAL COMBINATION LOCK

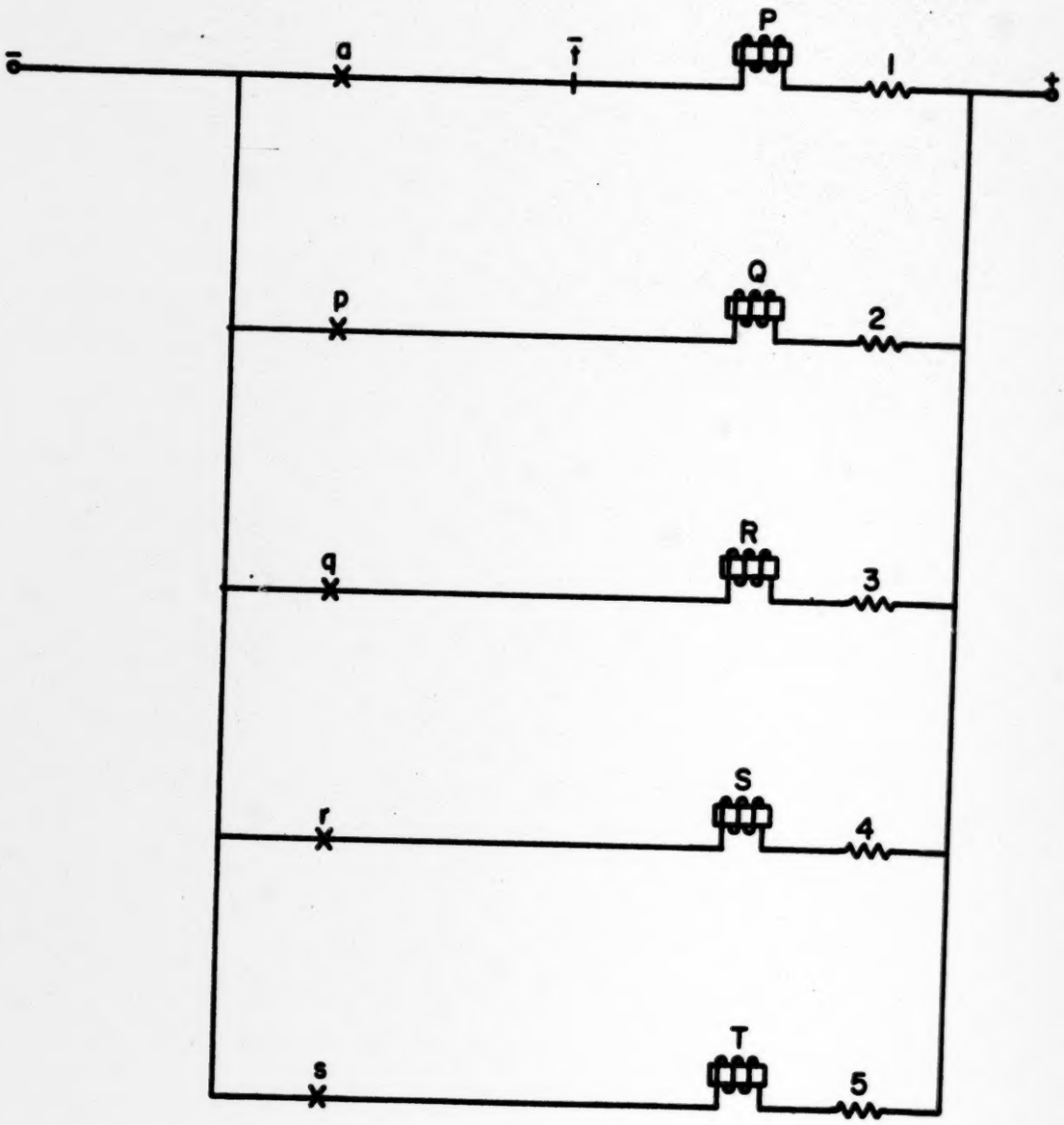

T-13
RUN-WAY CIRCUIT

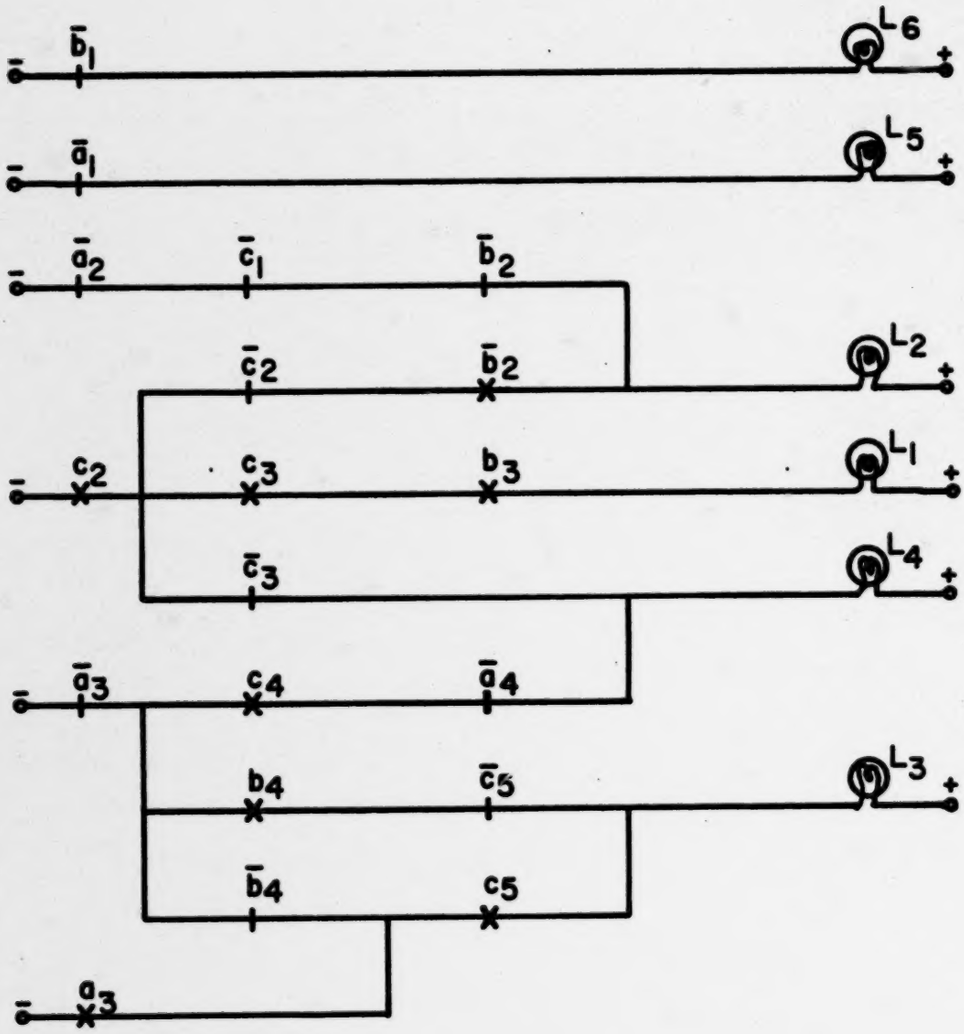

T-14

MAKE A TABLE OF COMBINATIONS FOR THIS CIRCUIT AND DETERMINE THE FUNCTION DETERMINED BY IT.

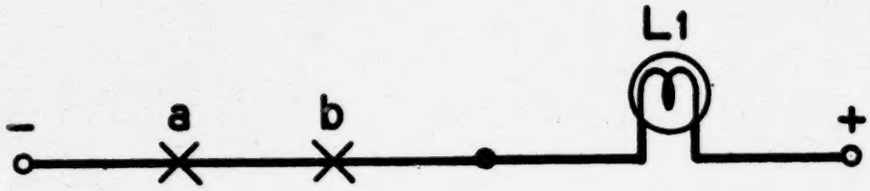

A	B	L1
0	0	
0	1	
1	0	
1	1	

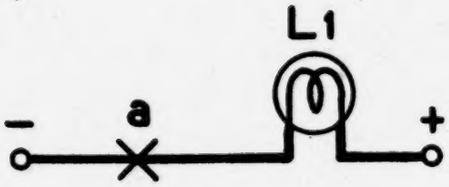

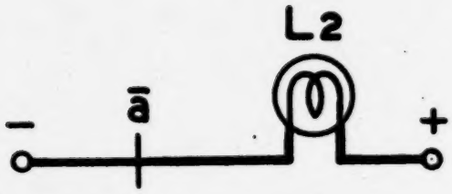

A	L1	L2
0		
1		

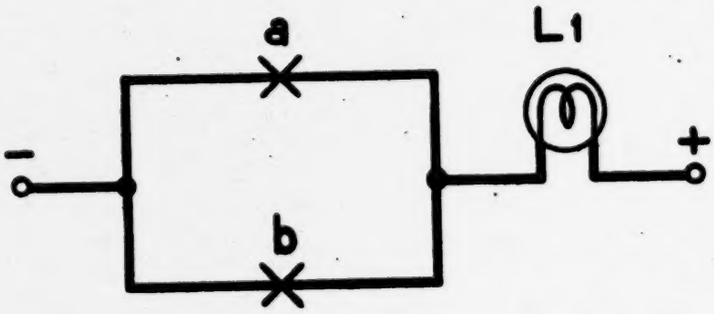

A	B	L1
0	0	
0	1	
1	0	
1	1	

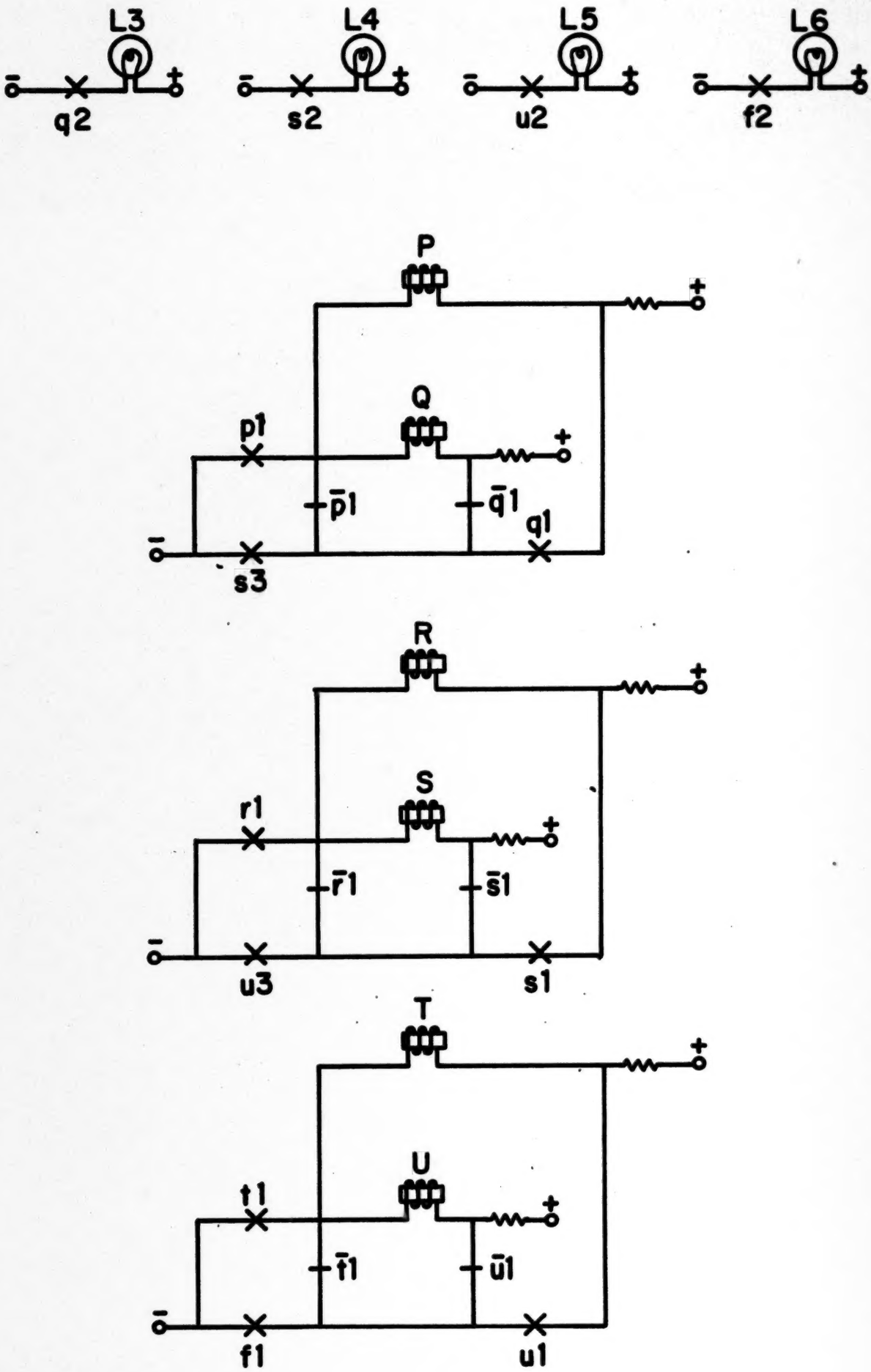

T-16 Three Stage Counter

SWITCH CONTACT NETWORK	WHAT IS REQUIRED TO MAKE L = 1 ?
EXAMPLE: ① 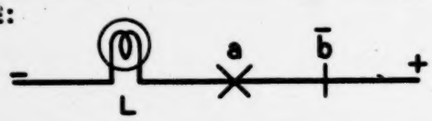	a = 1 <u>AND</u> $\bar{b}$ = 0
② 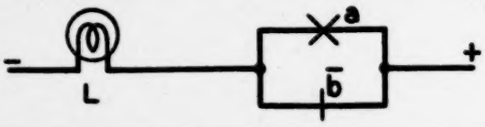	
③ 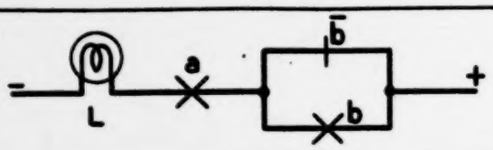	
④	a = 1 <u>AND</u>; b = 1 OR $\bar{c}$ = 0
⑤ 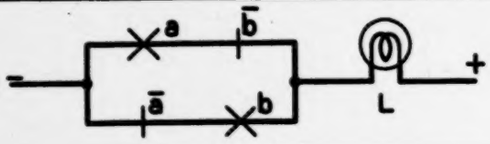	
⑥	a = 1 AND b = 1 OR, a = 1 AND C = 1 OR, b = 1 AND C = 1 :

WEIGHTS :	(64)	(32)	(16)	(8)	(4)	(2)	(1)
CARRY DIGITS :							
FIRST NUMBER, A :							
SECOND NUMBER, B :							
SUM, S :							

(a) EXAMPLE OF THE ADDITION OF TWO BINARY NUMBERS

NUMBER OF 1'S	CARRY DIGIT	SUM DIGIT
NONE		
ONE		
TWO		
THREE		

(b) RULES FOR FINDING THE SUM AND CARRY DIGITS

T-18 — **Illustrating addition in the binary system.**

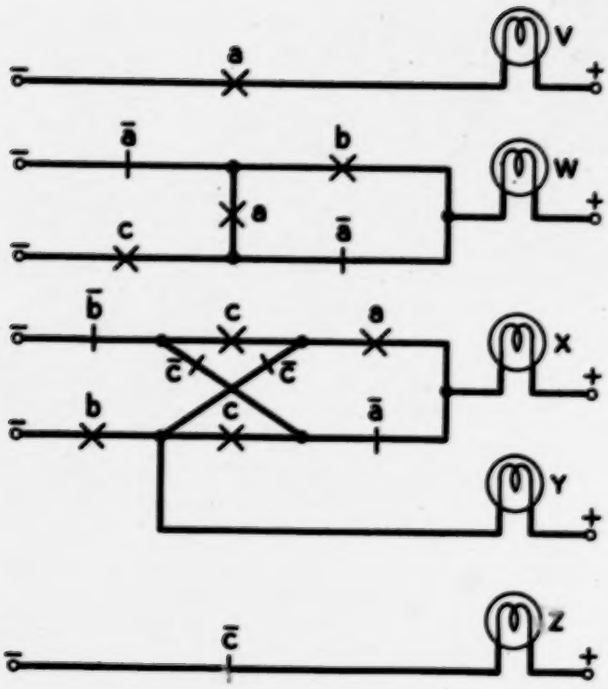

T-19 **14 — A circuit which evaluates a function which is to be determined.**

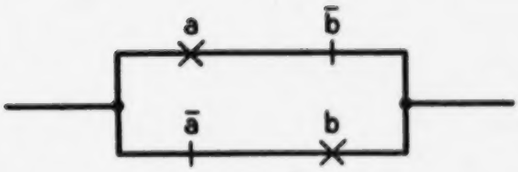

(a)

A TWO-VARIABLE ODD-PARITY CIRCUIT

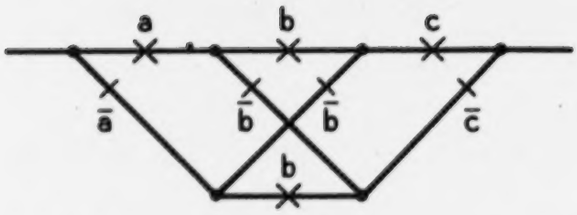

(b)

A THREE-VARIABLE ODD-PARITY CIRCUIT

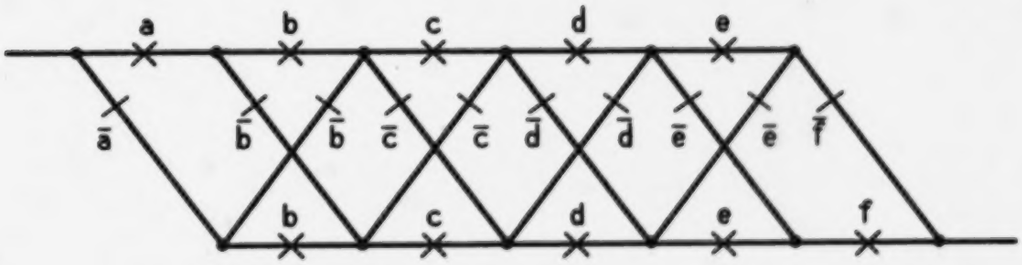

(c)

A SIX-VARIABLE ODD-PARITY CIRCUIT

T-20 — **Odd-parity circuits.**

		Decimal	Binary
N = 141-1 = 140	= 2 x 70	2 x 0 + 1 = 1	1
70-0 = 70	= 2 x 35	2 x 1 + 0 = 2	10
35-1 = 34	= 2 x 17	2 x 2 + 0 = 4	100
17-1 = 16	= 2 x 8	2 x 4 + 0 = 8	1000
8-0 = 8	= 2 x 4	2 x 8 + 1 = 17	10001
4-0 = 4	= 2 x 2	2 x 17+ 1 = 35	100011
2-0 = 2	= 2 x 1	2 x 35+ 0 = 70	1001000
1-1 = 0	= 2 x 0	2 x 70+ 1 = 141	10001101 =N

(a) ANALYSIS OF THE DECIMAL NUMBER 141

(b) SYNTHESIS OF THE BINARY NUMBER 10001101

T-21 Determining how to write 141 as a binary number

		2^8	2^7	2^6	2^5	2^4	2^3	2^2	2^1	2^0	
M = 34:					1	0	0	0	1	0	
N = 19:						1	0	0	1	1	
					1	0	0	0	1	0	$= 1 \times 2^0 \times M = 1 \times M$
				1	0	0	0	1	0		$= 1 \times 2^1 \times M = 2 \times M$
			0	0	0	0	0	0			$= 0 \times 2^2 \times M = 0 \times M$
		0	0	0	0	0	0				$= 0 \times 2^3 \times M = 0 \times M$
	1	0	0	0	1	0					$= 1 \times 2^4 \times M = 16 \times M$

(Add the Five Numbers Above to Obtain the Desired Product)

(Sum Equals 19 x M)

(a)

LOGIC CIRCUIT BOARD

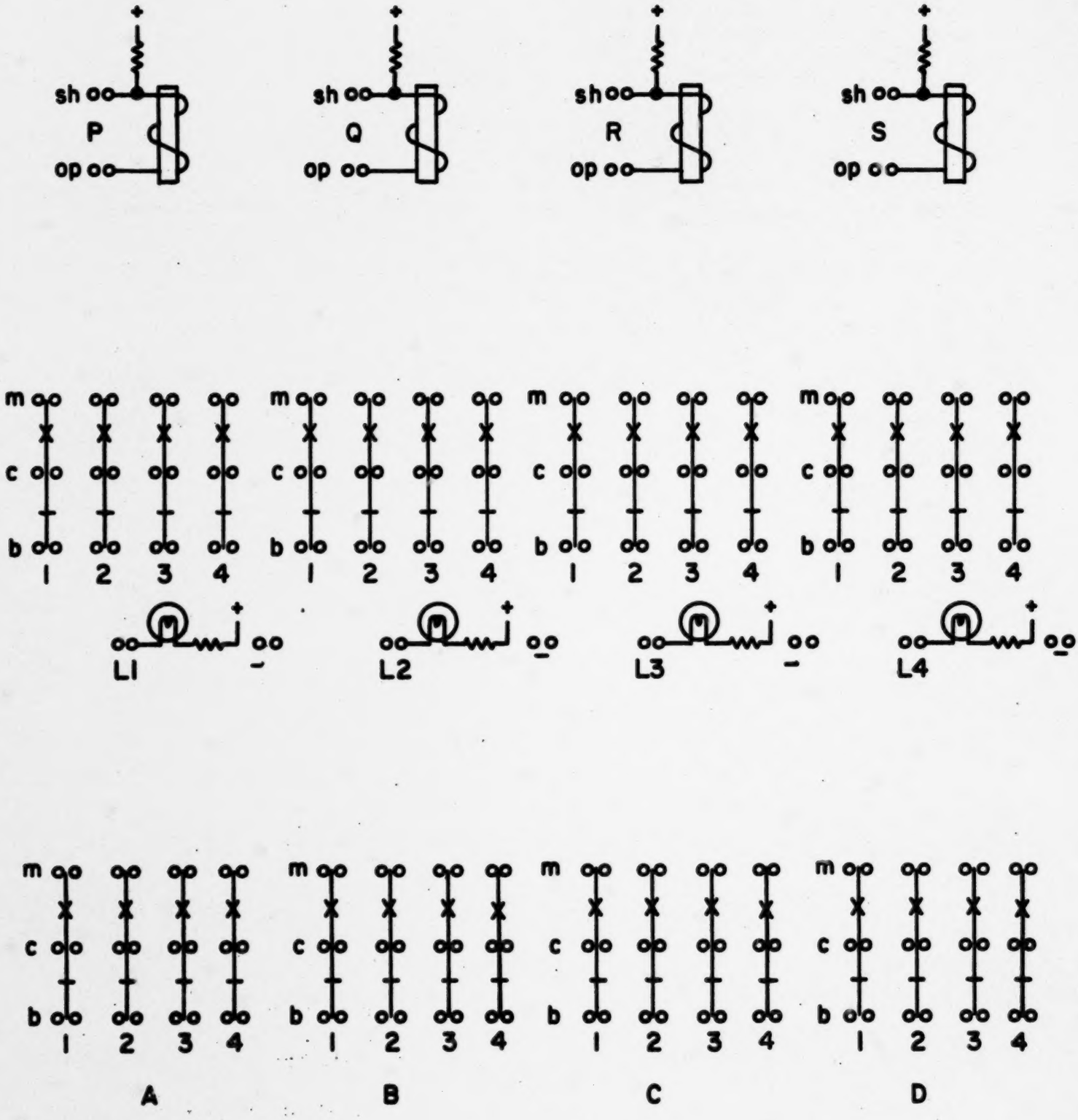

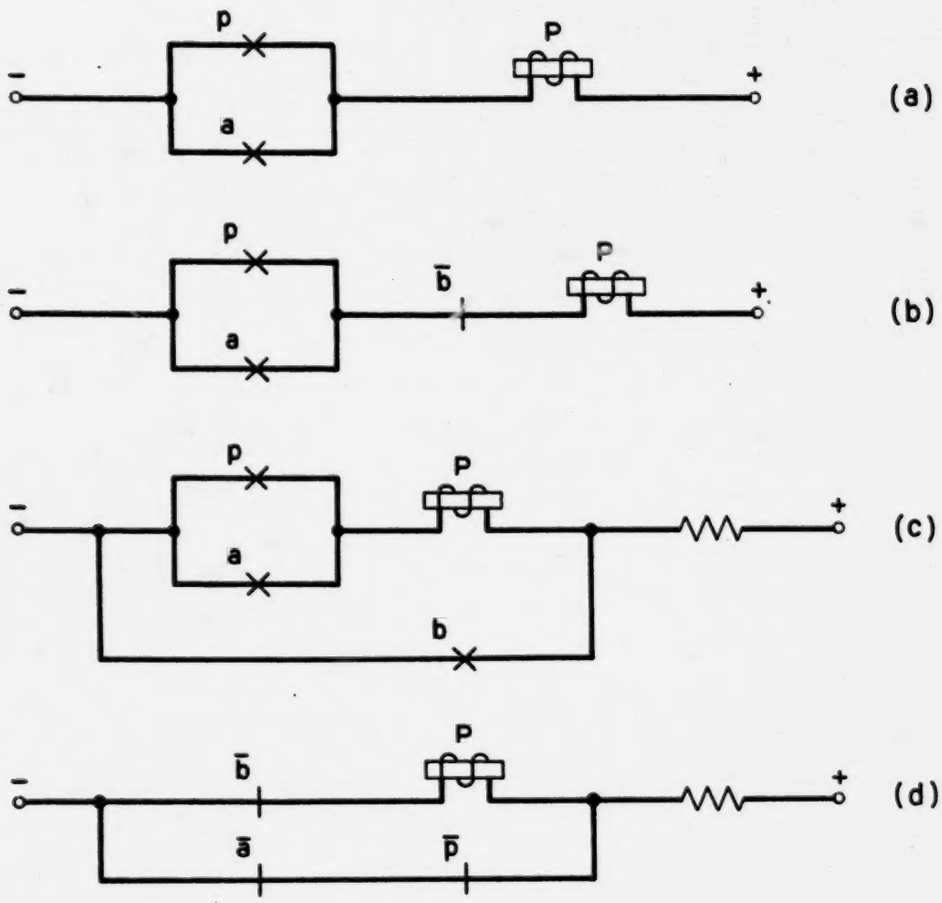

T-24 —Simple circuits exhibiting memory.

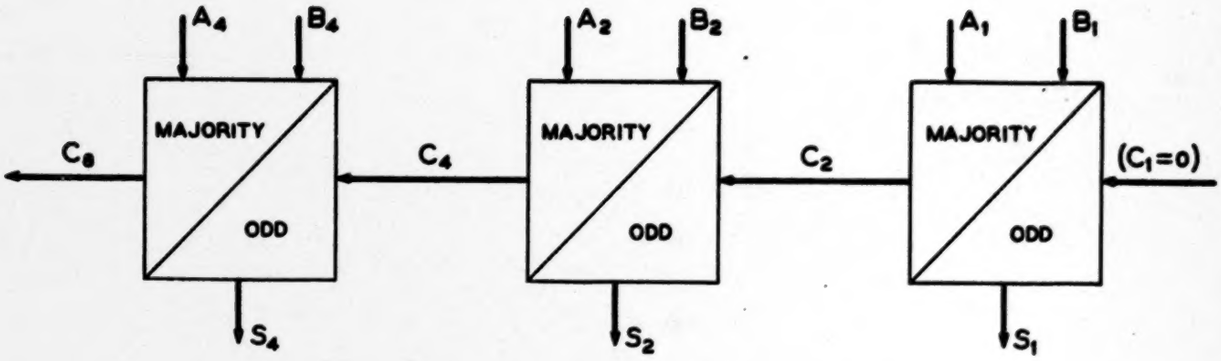

(a) SCHEMATIC DIAGRAM OF THE ADDER

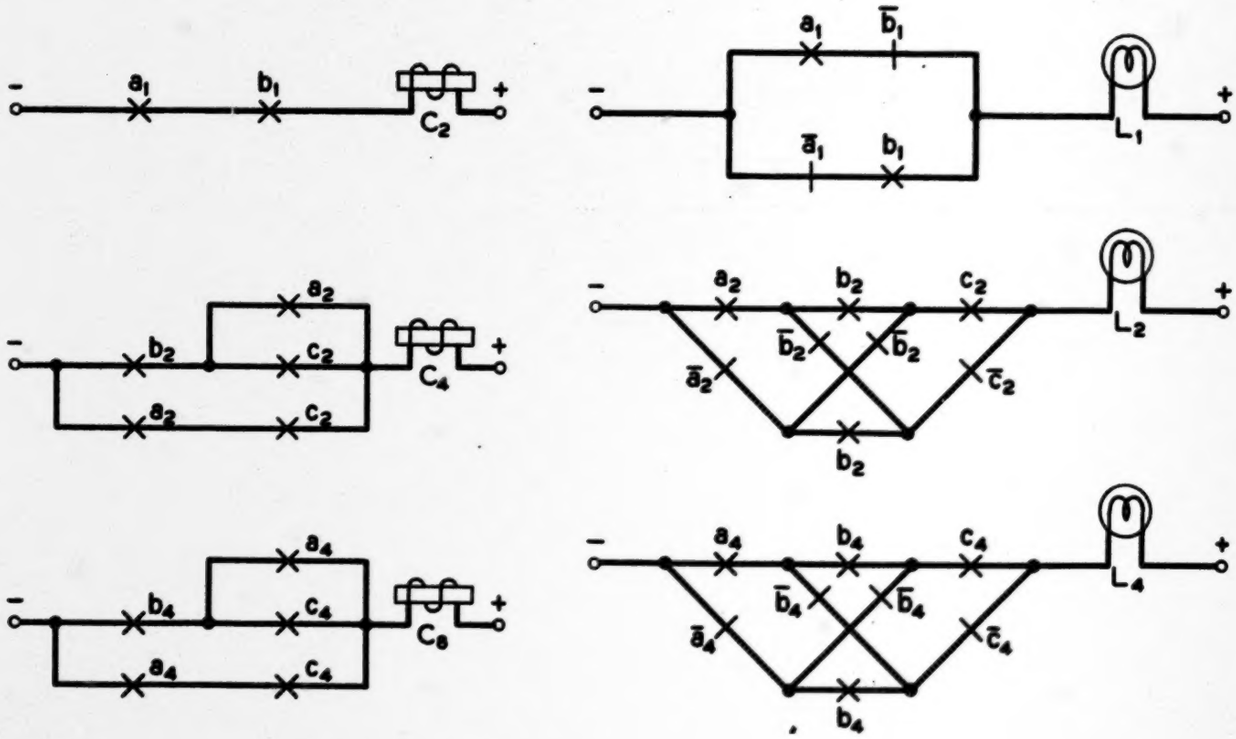

(b) CIRCUIT DIAGRAM OF A BINARY ADDER

T-25 — **A binary adder with three stages.**

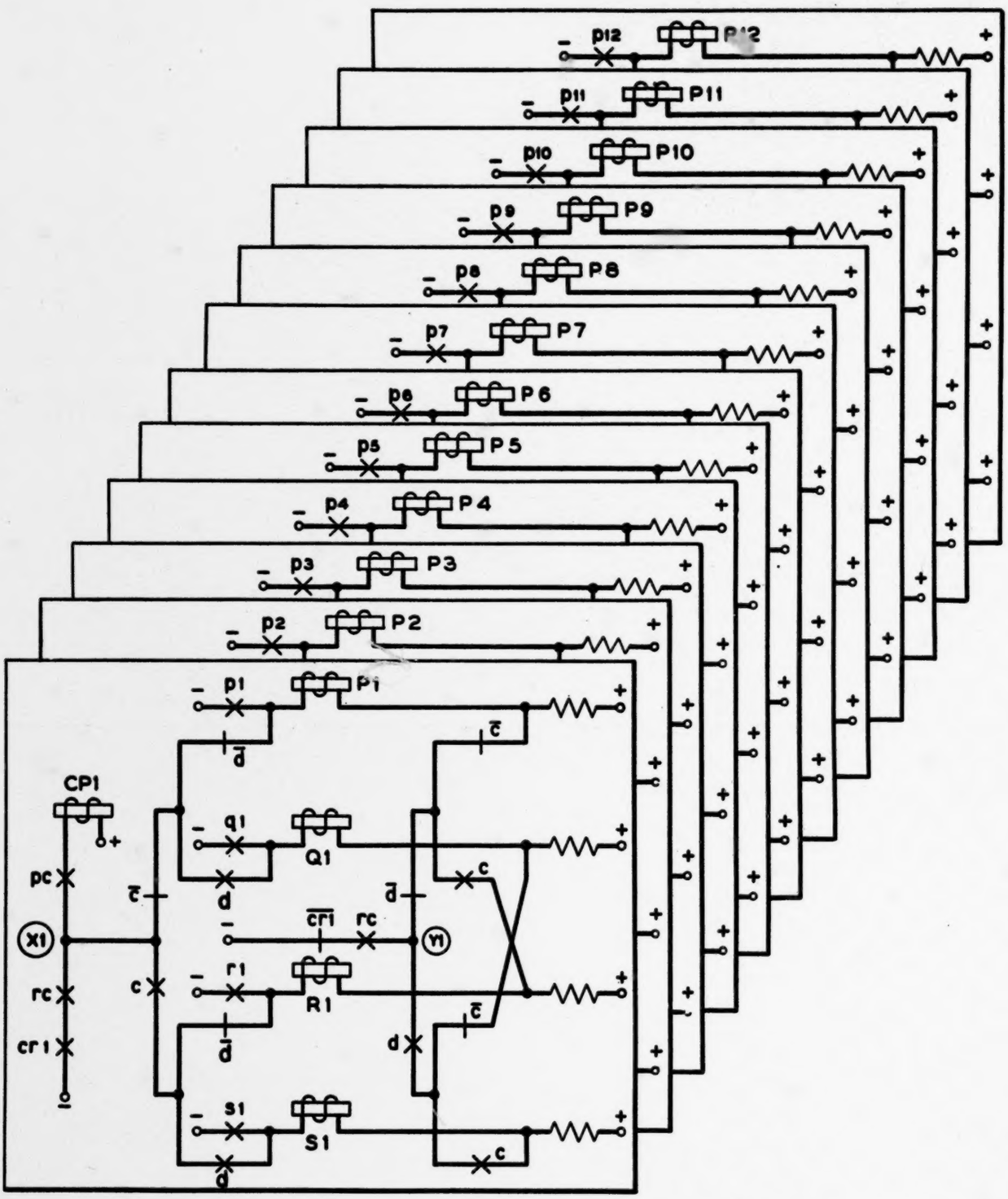

T-26 - Card reader and card punch connected to memory.

	2^8	2^7	2^6	2^5	2^4	2^3	2^2	2^1	2^0		
M = 27:					1	1	0	1	1		
N = 23:					1	0	1	1	1		
					1	1	0	1	1	$= 1 \times 2^0 \times M$	$= 1 \times M$
				1	1	0	1	1	(0)	$= 1 \times 2^1 \times M$	$= 2 \times M$
			1	1	0	1	1	(0	0)	$= 1 \times 2^2 \times M$	$= 4 \times M$
		0	0	0	0	0	(0	0	0)	$= 0 \times 2^4 \times M$	$= 0 \times M$
	1	1	0	1	1	(0	0	0	0)	$= 1 \times 2^8 \times M$	$= 16 \times M$

(ADD THE FIVE NUMBERS ABOVE TO OBTAIN THE DESIRED PRODUCT) (SUM EQUALS 23 x M)

(a)

	2^9	2^8	2^7	2^6	2^5	2^4	2^3	2^2	2^1	2^0	
INITIAL PARTIAL SUM:						0	0	0	0	0	
					+	1	1	0	1	1	$= 1 \times 2^0 \times M$
FIRST PARTIAL SUM:						1	1	0	1	1	
				+	1	1	0	1	1	(0)	$= 1 \times 2^1 \times M$
SECOND PARTIAL SUM:				1	0	1	0	0	0	1	
			+	1	1	0	1	1	(0	0)	$= 1 \times 2^2 \times M$
THIRD PARTIAL SUM:			1	0	1	1	1	1	0	1	
		+	0	0	0	0	0	(0	0	0)	$= 0 \times 2^4 \times M$
FOURTH PARTIAL SUM:			1	0	1	1	1	1	0	1	
	+	1	1	0	1	1	(0	0	0	0)	$= 1 \times 2^8 \times M$
FINAL SUM:	1	0	0	1	1	0	1	1	0	1	

(b)

T-27 — **Illustrating the multiplication of two binary numbers.**

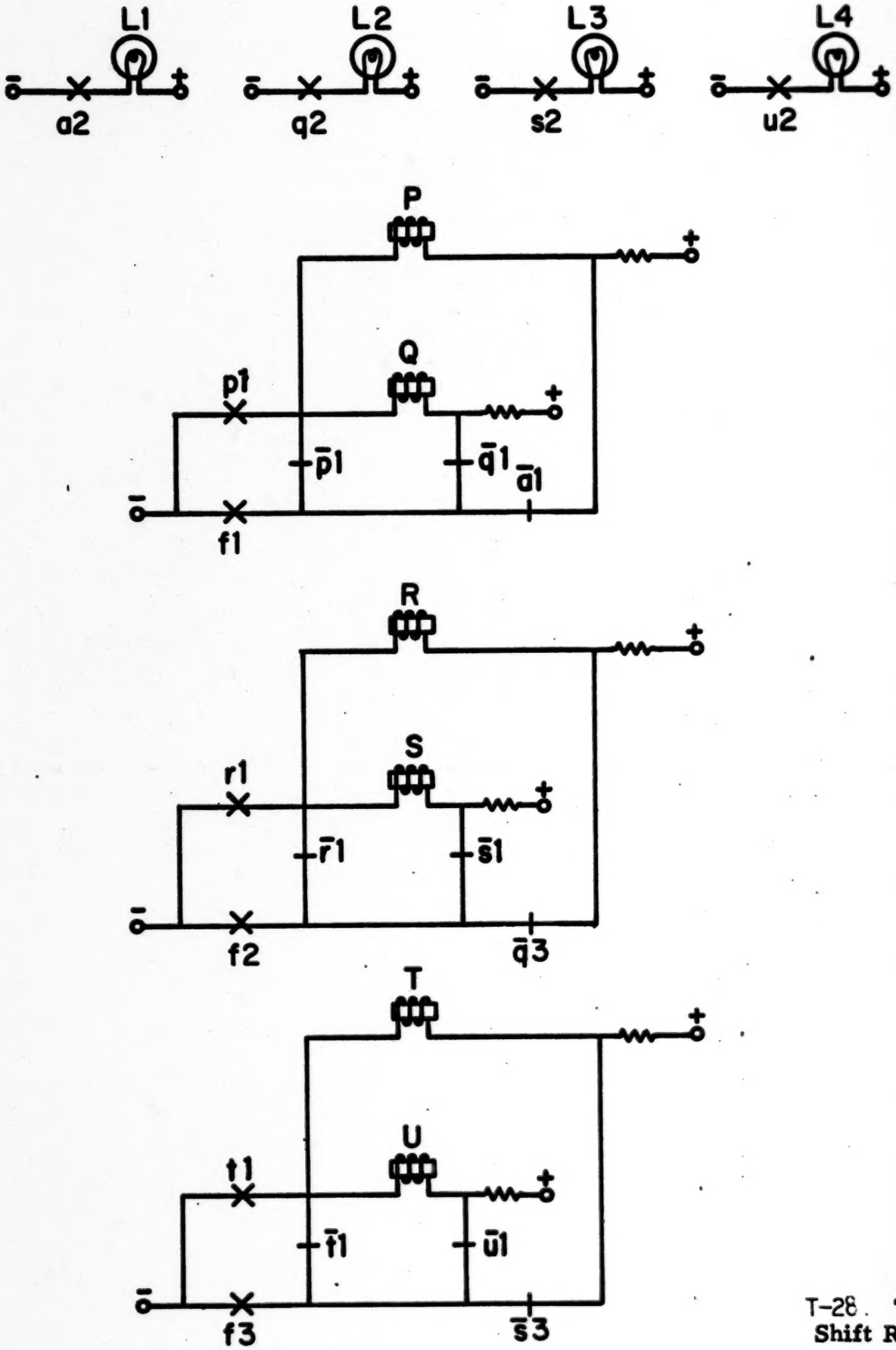

T-28. **Three Stage Shift Register**

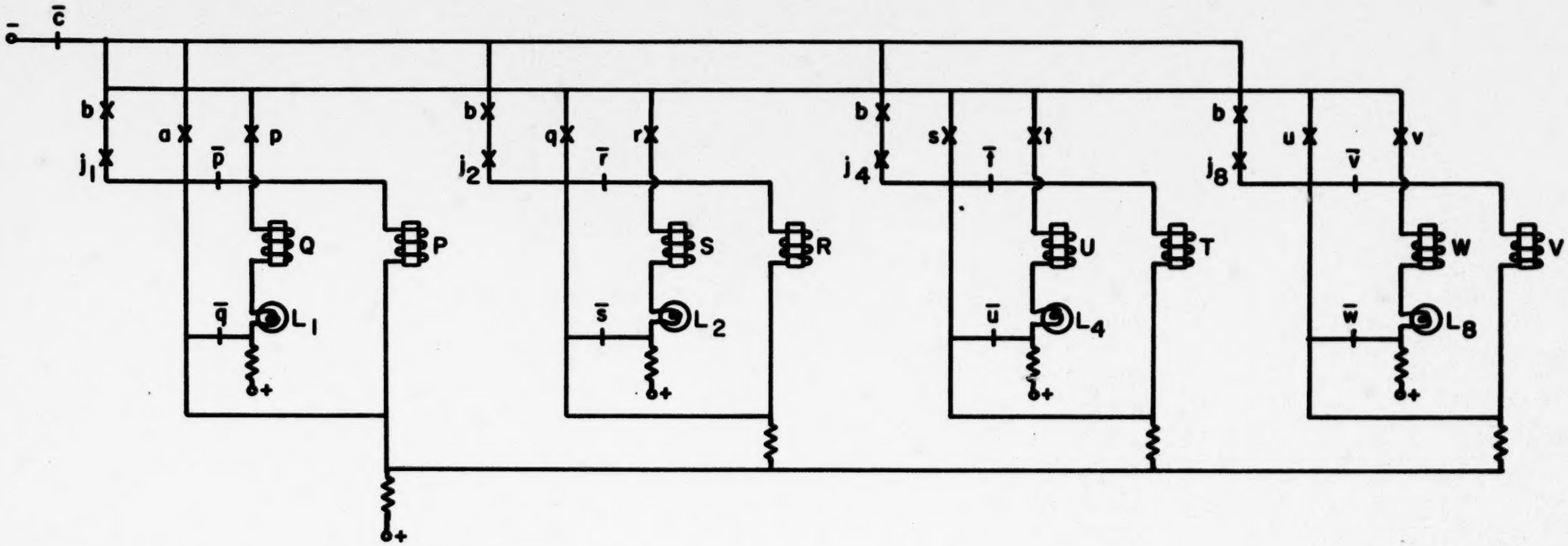
c̄
b
a
p
p̄
j1
Q
P
q̄
L1
b
q
r
r̄
j2
S
R
s̄
L2
b
s
t
t̄
j4
U
T
ū
L4
b
u
v
v̄
j8
W
V
w̄
L8

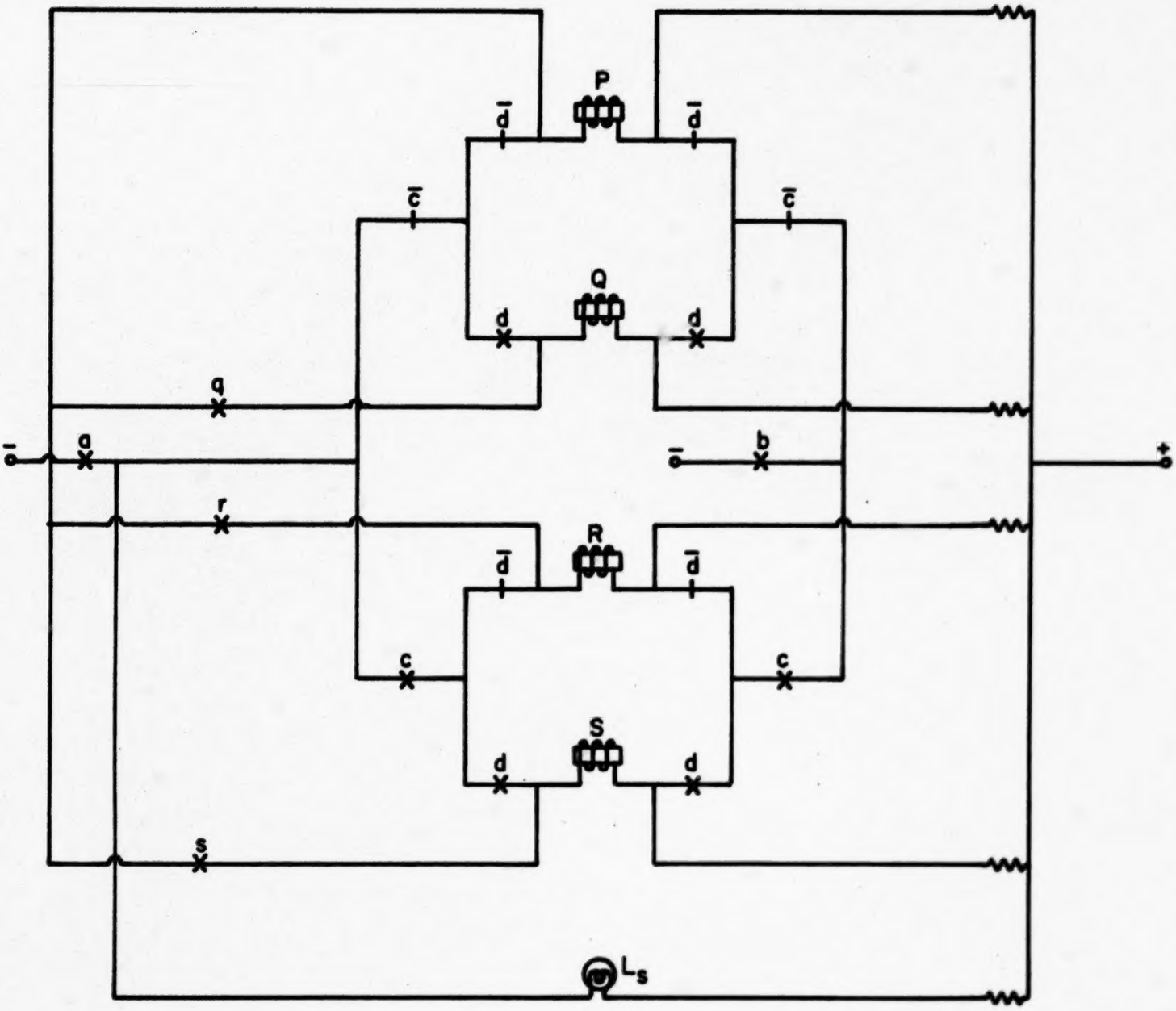

T-30 Four-One Bit Memory Circuit:

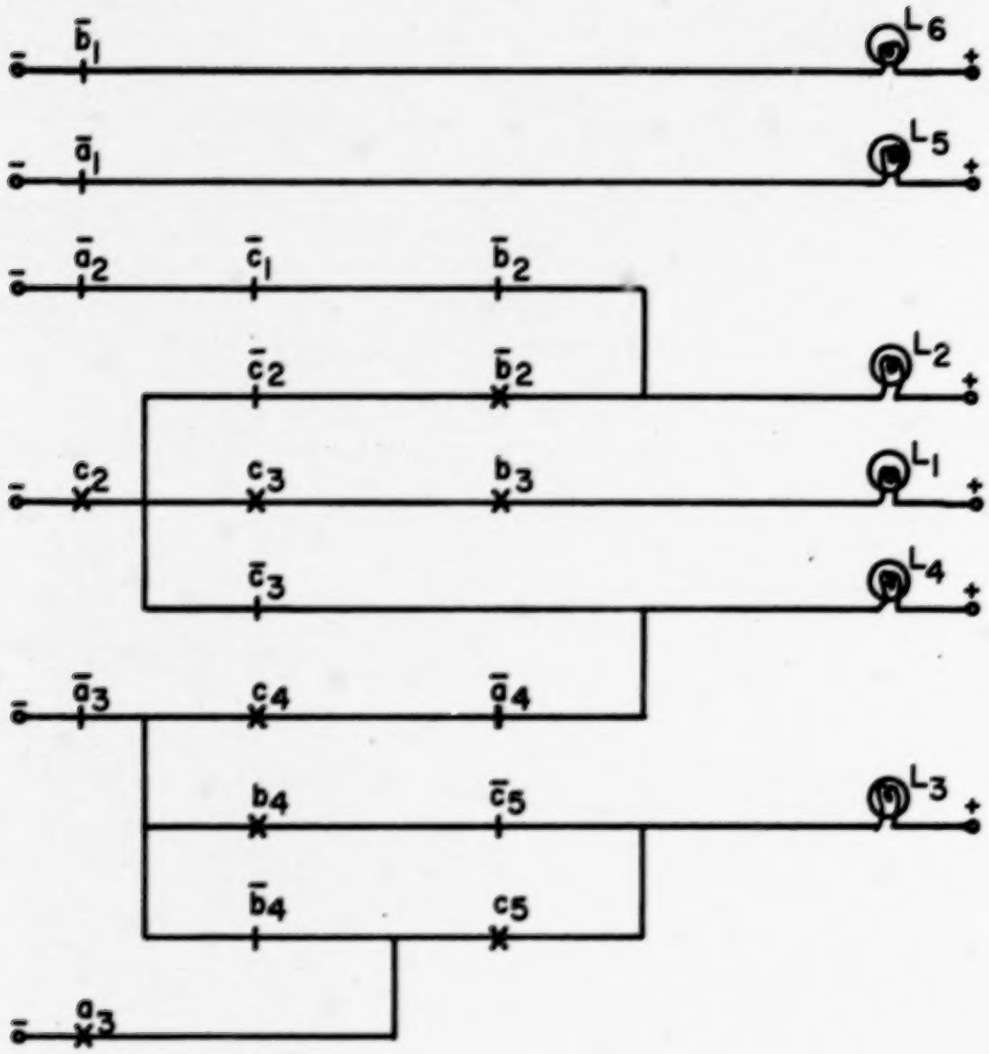

T-31 MAKE A TABLE OF COMBINATIONS FOR THIS CIRCUIT AND DETERMINE THE FUNCTION DETERMINED BY IT.

A program for determining whether or not A > B

Memory Address	Word Stored
16	030
17	031
18	403
19	632
20	130
21	731
22	326
23	131
24	730
25	328
26	532
27	900
28	500
29	900
30	—
31	—
32	—

A program to determine whether A = B or not

Memory Address	Word Stored
41	057
42	058
43	403
44	653
45	157
46	758
47	354
48	158
49	757
50	354
51	556
52	900
53	—
54	553
55	900
56	001
57	—
58	—

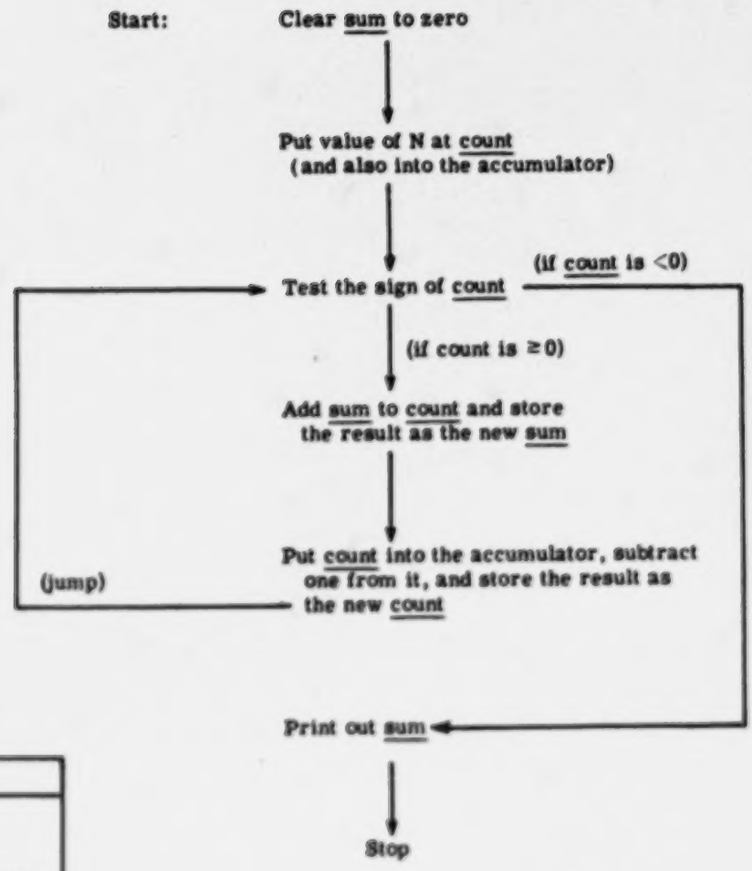

	Operation	Address	Comment
	SFT	03	Clear accumulator to zero
	STO	SUM	and store this zero at SUM.
	INP	COUNT	Copy value of N from input card into COUNT
	CLA	COUNT	and bring this same value to accumulator.
UP	TAC	DOWN	Test negativeness of the number at COUNT.
	ADD	SUM	If count is non-negative, add sum to it
	STO	SUM	and store the result as the new sum.
	CLA	COUNT	Get count again,
	SUB	ONE	subtract one from it,
	STO	COUNT	store as the new count and
	JMP	UP	go back to earlier instruction.
DØWN	OUT	SUM	If count is negative, print out sum
	HRS	00	and stop.
SUM			
COUNT			
ONE	0	01	

A symbolic program corresponding to the flow chart

Memory Address	Stored Word
	(X YZ)
25	4 03
26	6 38
27	0 39
28	1 39
29	3 36
30	2 38
31	6 38
32	1 39
33	7 40
34	6 39
35	8 29
36	5 38
37	9 00
38	(0 00)
39	(0 00)
40	0 01

- Assembled program in machine code.

```
UP      INP     N
        CLA     N
        SFT     02
        STO     SUM
        CLA     N
        SFT     12
        ADD     SUM
        STO     SUM
        CLA     N
        SFT     22
        ADD     SUM
        STO     SUM
        SFT     12
        STO     CHECK
        CLA     SUM
        SFT     22
        ADD     CHECK
        STO     CHECK
        OUT     CHECK
        JMP     UP
N
SUM
CHECK
```

```
        SFT     03
        STO     SUM
        STO     OVER
        INP     COUNT
UP      CLA     COUNT
        SUB     00
        STO     COUNT
        TAC     EXIT
        INP     NUMBER
        CLA     NUMBER
        ADD     SUM
        STO     SUM
        HRS     DOWN
        JMP     UP
DOWN    CLA     OVER
        ADD     00
        STO     OVER
        JMP     UP
EXIT    OUT     OVER
        OUT     SUM
        HRS     00
SUM
OVER
COUNT
NUMBER
```

Main Program:

(21)		INP	P
(22)		INP	Q
(23)	MORE	CLA	Q
(24)		STO	98
(25)		CLA	P
(26)		JMP	$RMNDR
(27)		STO	R
(28)		SFT	03
(29)		SUB	R
(30)		TAC	ARCTIC
(31)		OUT	Q
(32)		HRS	00
(33)	ARCTIC	CLA	Q
(34)		STO	P
(35)		CLA	R
(36)		STO	Q
(37)		JMP	MORE
(38)	P		
(39)	Q		
(40)	R		

Subroutine:

(73)	RMNDR	STO	REMAIN
(74)		CLA	98
(75)		STO	DENOM
(76)		CLA	99
(77)		STO	EXIT "a"
(78)		CLA	REMAIN
(79)	AGAIN	SUB	DENOM
(80)		TAC	FINIS
(81)		STO	REMAIN
(82)		JMP	AGAIN "b"
(83)	FINIS	CLA	REMAIN
(84)	EXIT	(jump back)	
(85)	REMAIN		
(86)	DENOM		

- Illustrating the "call" of a subroutine by another program.

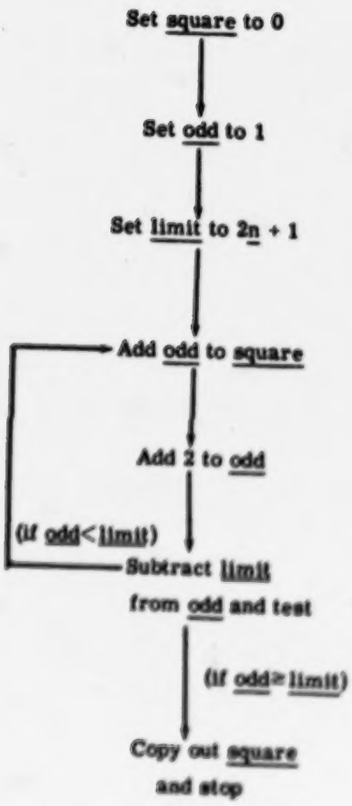

(a) Flow Chart

Address	Word	Comment
17	4 03	Set square to 0
18	6 35	
19	1 39	Set odd to 1
20	6 36	
21	0 38	Set limit to 2n + 1
22	2 38	
23	2 38	
24	6 37	
25	1 35	Add odd to square
26	2 36	
27	6 35	
28	1 36	Add 2 to odd
29	2 40	
30	6 36	
31	7 37	Subtract limit from odd
32	3 25	and test
33	5 35	Copy out square
34	9 00	and stop
35	- --	(cell for square)
36	- --	(cell for odd)
37	- --	(cell for limit)
38	- --	(cell for n)
39	0 01	(cell for 1)
40	0 02	(cell for 2)

(b) Program in machine code

T-36 - A program for computing squares.

Year (Y)	Sale Value (50)	Oper. Cost (OC)	Depreci-ation (D)	Comu. Oper. Cost	Total Cost (TC)	Av. Cost Per Year C/Yr.
0	$2800	-	-	-	-	-
1	2200	$800	$600			
2	1650	850	1080			
3	1250	900	1460			
4	980	950	1770			
5	740	1000	2020			
6	550	1050	2260			
7	450	1100	2480			
8	170	1150	2680			
9	50	1200	2850			
10	50	1250	2950			

T-37 Car trade-in problem data.

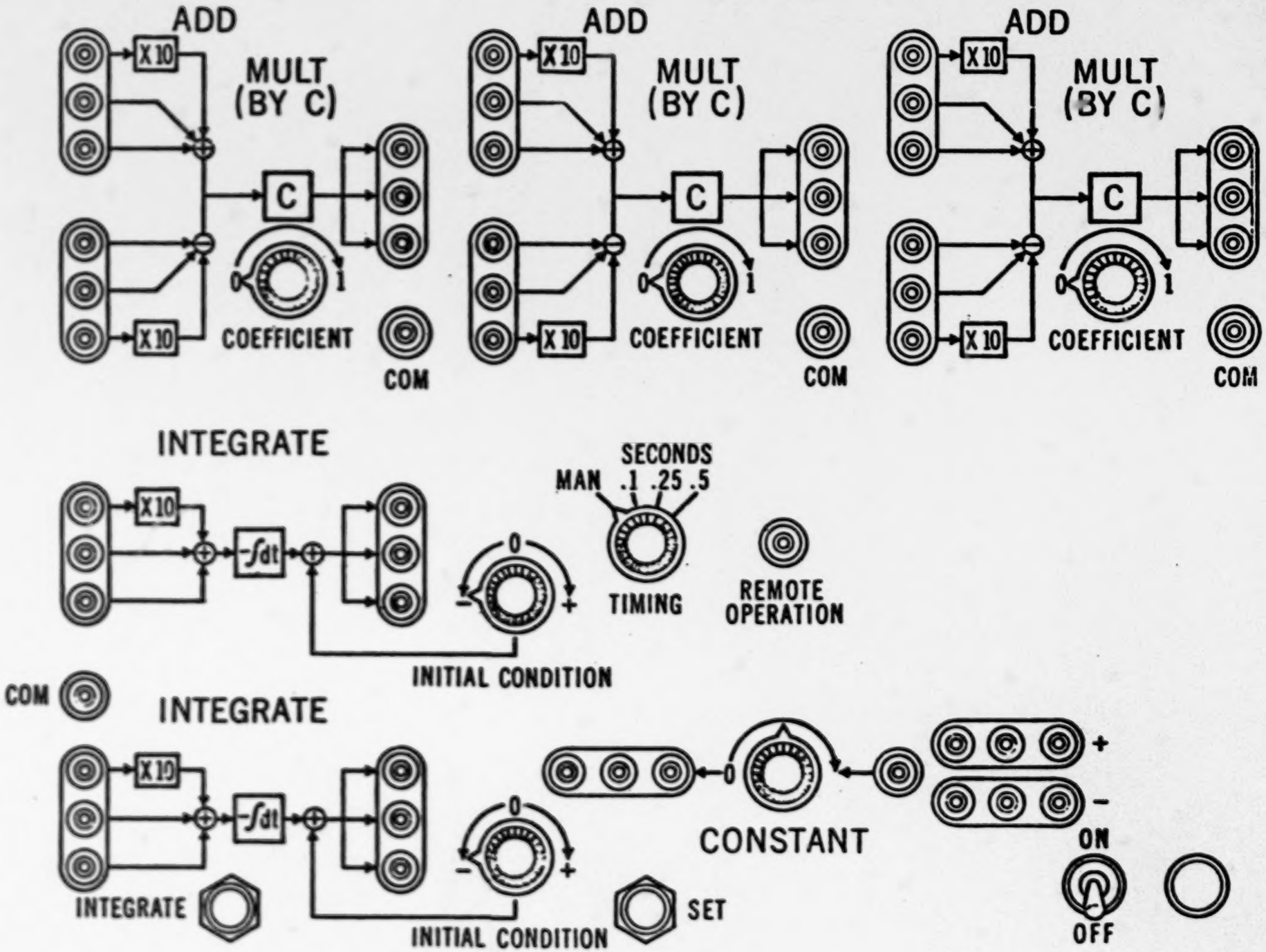
ADD
MULT (BY C)
X 10
C
0
1
COEFFICIENT
COM
ADD
MULT (BY C)
X 10
C
0
1
COEFFICIENT
COM
ADD
MULT (BY C)
X 10
C
0
1
COEFFICIENT
COM
INTEGRATE
X 10
∫dt
0
−
+
INITIAL CONDITION
SECONDS
MAN .1 .25 .5
TIMING
REMOTE OPERATION
COM
INTEGRATE
X 10
∫dt
0
−
+
INTEGRATE
INITIAL CONDITION
SET
CONSTANT
0
+
−
ON
OFF

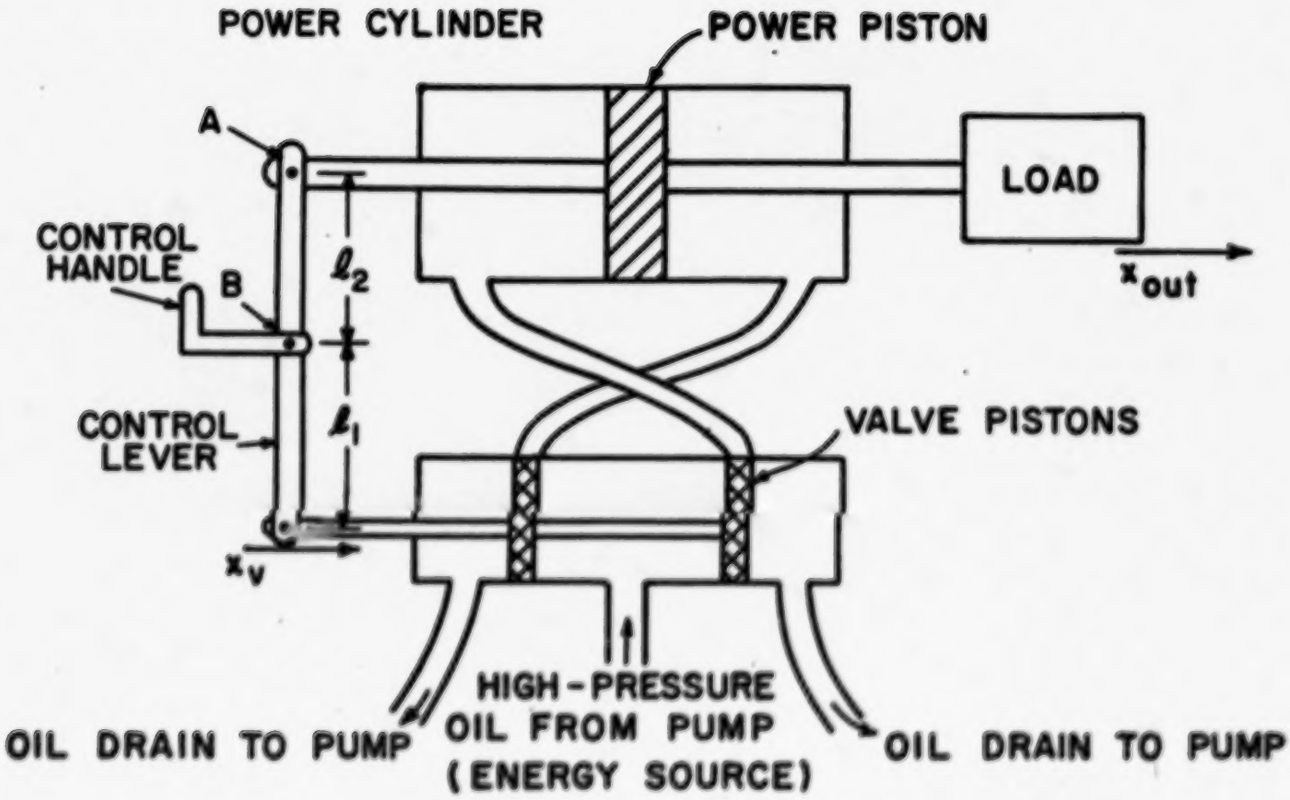

T-39 An improved form of the hydraulic amplifier with feedback linkage.

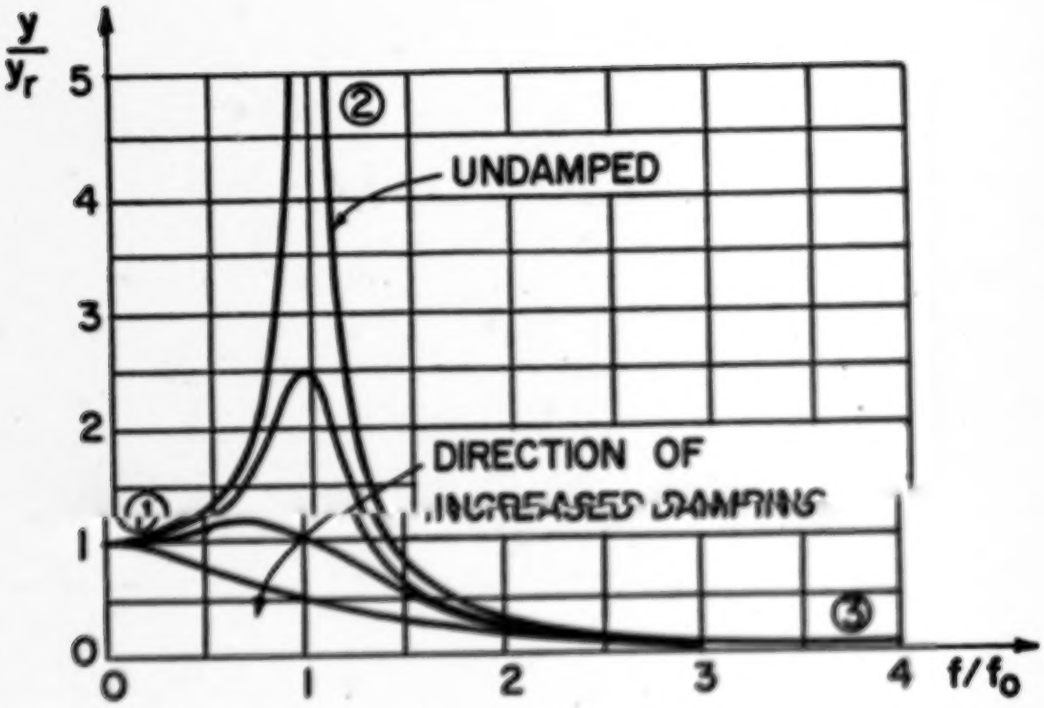

T-40 Amplitude response-excitation curve for a damped mass-spring system.

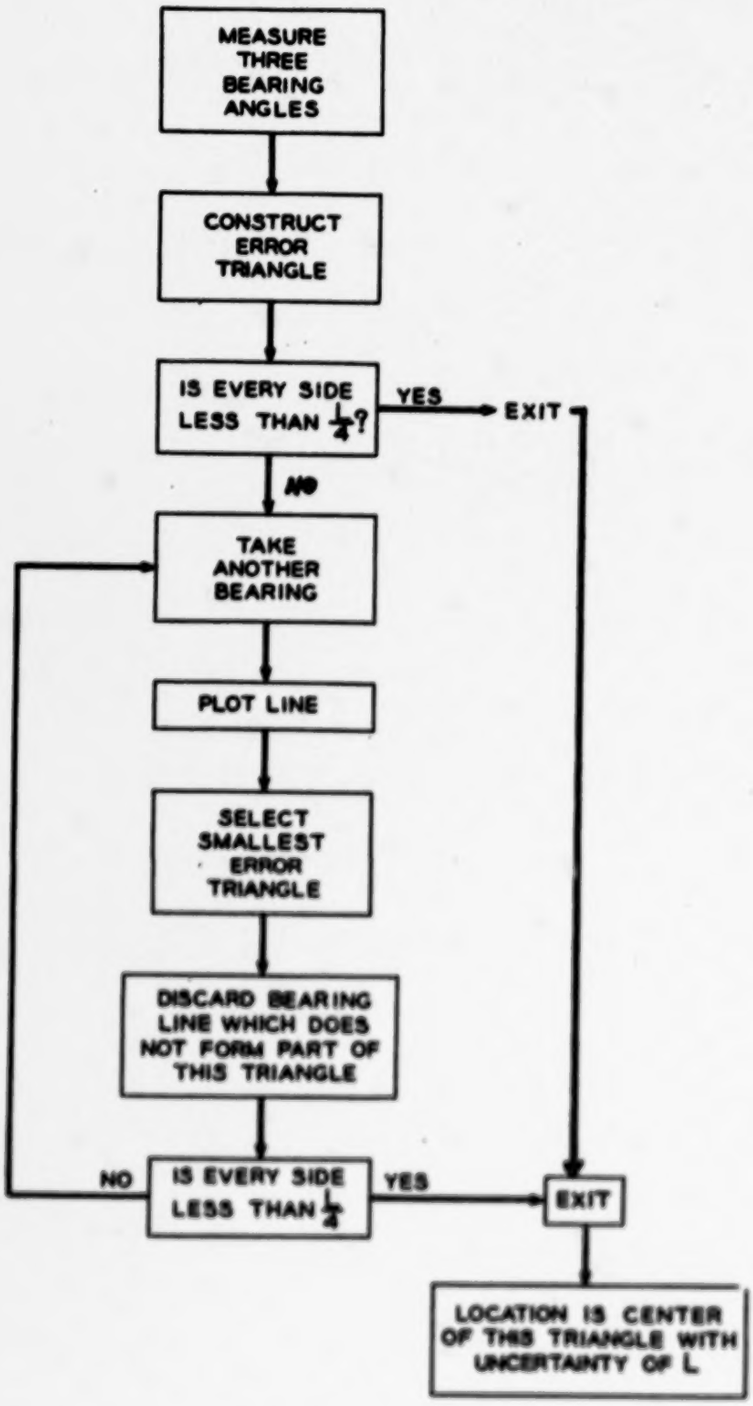

T-41 - A flow diagram for minimizing errors in the triangulation process.

Below you will find a model of adult male rabbit Trachea-Bronchial systems as measured and reported by Dr. Jones after studying 1000 normal, healthy male adult rabbits.

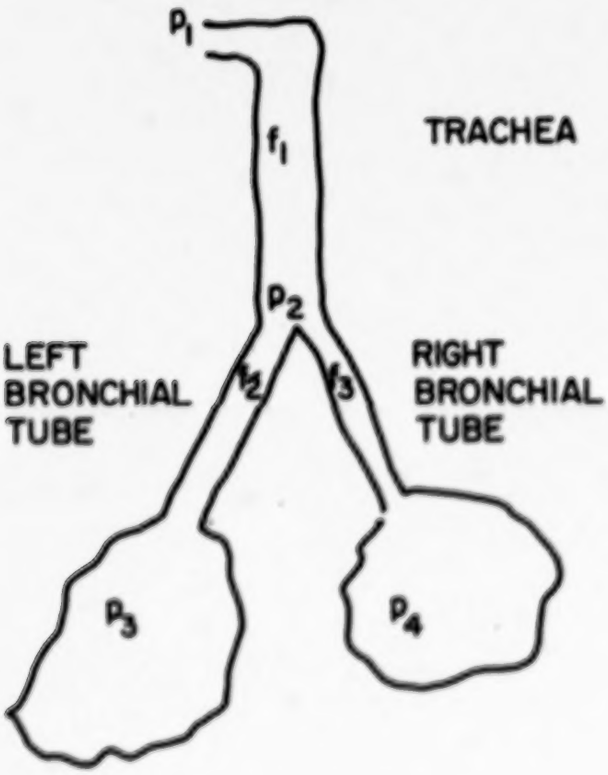

P_1 = pressure at mouth

P_2 = pressure at branch of bronchial tubes

$P_3 + P_4$ = pressure at left and right lungs

f = flow rate of air in respective tubes in FT^3/sec

$$f_1 = 2\,(P_1 - P_2)$$

$$f_2 = 1\,(P_2 - P_3)$$

$$f_3 = 0.5\,(P_2 - P_4)$$

$$f_1 = f_2 + f_3$$

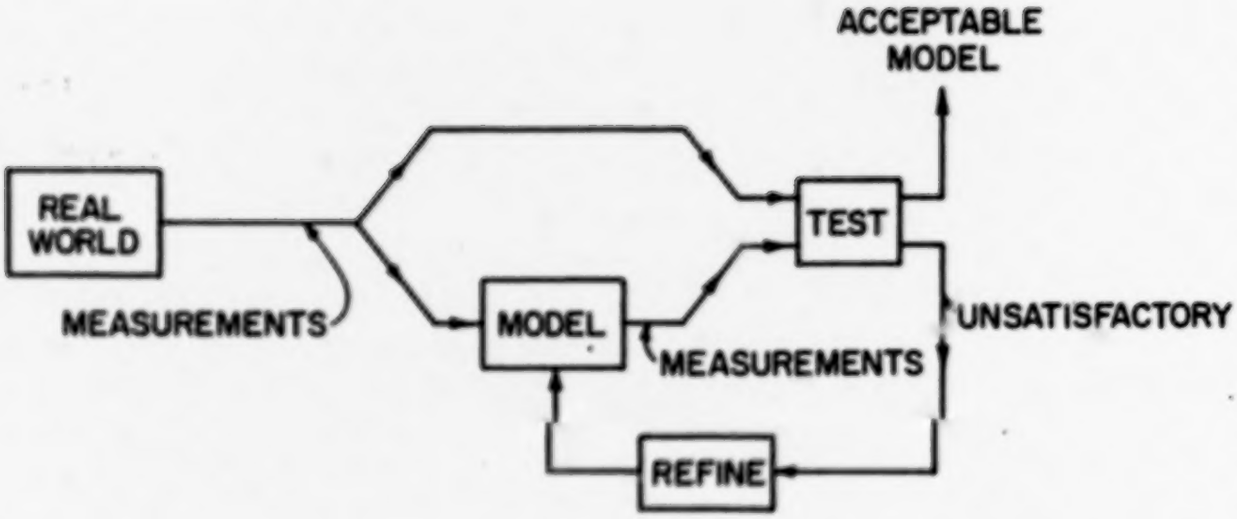

T-43 The Model-making process, shown as a Block-diagram.

- The flow diagram of a dead-reckoning navigational method. No feedback is used.

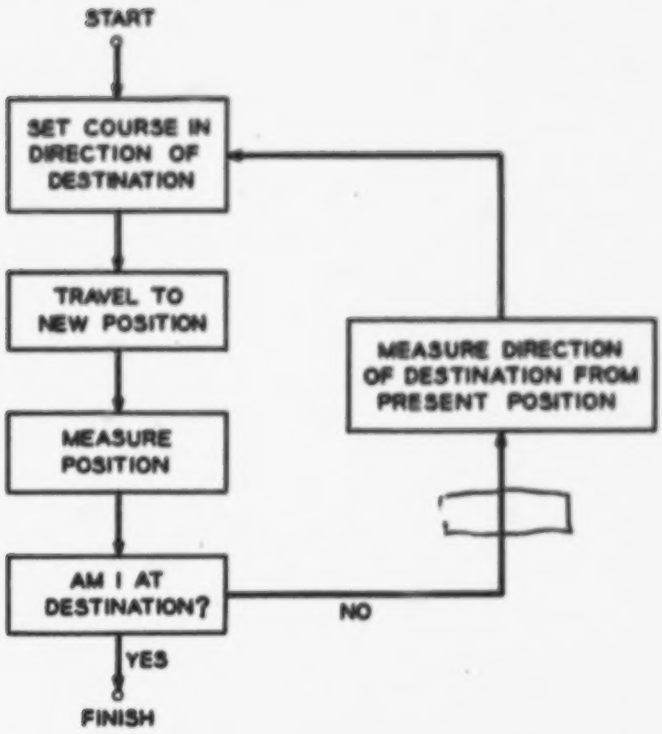

- The flow diagram of a guidance method using feedback.

NOTE TO THE TEACHER REGARDING LABORATORY EXPERIMENTS

The laboratory work is an integral and essential part of the ECCP course. Since the laboratory situation will vary considerably among schools, we have not attempted to indicate a rigid schedule but rather have given a general indication of when experiments can best be done.

The time required for an experiment will depend very much on the individual student; hence, we have not attempted to assign any specific number of periods. Many students will want to work individually in other than regular class time, and we hope you can encourage this.

Throughout the experiments you will find questions numbered with an asterisk, for example (*8). You may have the students answer these directly in their lab manuals, on a separate sheet of paper, or in whatever way seems most desirable to you.

We hope that the notes given here will make the laboratory phase of the ECCP course more profitable for both you and your students.

TML

EXPERIMENT I - Introduction to the Logic Circuit Board

Purpose: Familiarization with LCB, switches, "make" and "break" contacts, and relays; representation of "AND", "OR", and "NOT" in switching circuits.

Scheduling: As soon as text discussion of "AND", "OR" and "NOT" has been read. Will probably require 1 single lab period, if pre-lab discussion is done in advance.

Equipment: Logic circuit boards (with power supplies for older model).

Pre-lab discussion:

(1) Familiarize students with layout of components on LCB. Point out particulary the nature of the contact arrangement, which looks like this:

Each of the three portions of a set of contacts is connected to two eyelets which are side by side on the board, each pair at the level of the proper letter (m, c, b). The position of the symbol, —|✕|— or —|+|—, thus matches the electrical connection of the contacts which are symbolized. The beginner is apt to think that two adjacent eyelets are separated by a switch contact.

(2) Emphasize the kind treatment of jumper wires. They should be inserted and removed with a slight twisting motion. The wires themselves should not be bent sharply or distorted.

(3) If you are using the older model LCB's (with separate power supplies) point out to your students that the switches have only three sets of contacts, and not four as stated in the lab manual. This will cause no problems until Experiment IV, at which point separate running lists are given for this type LCB.

(4) Instruct students to insert and remove wires with the power OFF, as a matter of general practice.

Hints:

(1) If a student has difficulty making a circuit work properly, check wiring at contact points (see pre-lab discussion #1 above).

(2) If holes on LCB should be clogged with solder, use a #43 drill in a hand drill, not an electric drill.

(3) If your boards (probably only the older type) have exposed resistor wires, give these wires a coat of clear nail polish. The power supply fuse can be blown if a wire directly from "-" touches the "+" end of a resistor. BE PREPARED WITH SPARE FUSES.

(4) Students designing their own circuits may want more than four contacts on a switch or relay. In the case of a switch, one obvious solution is to use another switch and throw both simultaneously. A somewhat more elegant solution (for either switches or relays) is to use one set of the original contacts to control an otherwise unused relay, which thus offers four new sets of contacts.

Answers to questions:

(*1)

A	L1	L2
0	0	1
1	1	0

Fig. 6

(*2)

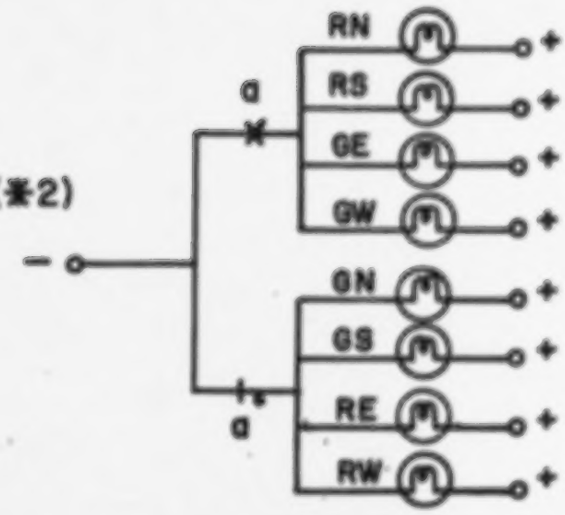

(*3)

A	B	L1
0	0	0
0	1	0
1	0	0
1	1	1

Fig. 8

(*4) One "1"

(*5)

A	B	L1
0	0	0
0	1	1
1	0	1
1	1	1

Fig. 10

(*6) Four "1s"

(*7)

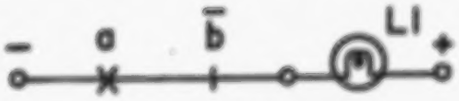

Fig. 11 (a)

A	B	L1
0	0	0
0	1	0
1	0	1
1	1	0

Fig. 11 (b)

(*8)

A	L1	L2
0	0	1
1	1	0

Fig. 15

(*9)

A	L1	L2
0	1	0
1	0	1

Fig. 17

(*10) In the circuit of Fig. 16, the power supply always furnishes current. In the circuit of Fig. 13, there is current only when the relay operates.

(*11) The method of Fig. 13 keeps battery drain as small as possible. This same method also keeps the relay coil cooler, which may be important in hot environments. But recall the original Morse telegraph using gravity cells, which had to be kept running to prevent diffusion of the Cu ions to the Zn electrode. However, Fig. 16 would not be suitable because it would make it impossible for one station to call another. The key was disabled by a shorting switch when not in use.

Post-lab discussion: Possible class discussion of some of the questions concerning relays.

Evaluation suggestions: Probably no report is necessary other than what can be written directly in the lab manual. This can be checked by the teacher while supervising the lab.

Subsequent activities: Students may want to start designing circuits on their own, particularly after they become more familiar with the LCB. By all means encourage this. Suggestions are given following some of the next few experiments.

EXPERIMENT II - Binary Numbers

Purpose: To introduce odd-parity and majority circuits; to combine these circuits in a binary adder.

Scheduling: After these circuits have been covered in text and discussed in class. (NOTE: It may be desirable to do this and following experiments is several parts, after each circuit has been discussed.)

Equipment: Logic circuit boards.

Pre-lab discussion: (1) Circuits should be analyzed in a prior class period.

(2) Instruct students in symbols used in running lists. Emphasize significance of commas and semicolons.

(3) Point out that the "." symbol used in Fig. 2 (a. $\overline{b}$) is a conventional representation for "AND".

Hints: (1) Some students may have difficulty wiring the circuit of Fig. 1 from the diagram. A reminder of the contact arrangement (Exp. I, pre-lab discussion #1) may be needed. It may be helpful to point out that when the circuit shows a connection to a make and break contact pair on the same switch, for example:

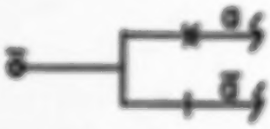

all that is needed is a single wire to the "c" terminal. If a student is really floundering hopelessly on this circuit, you can refer him to the subsequent discussion of running lists and the list for the two variable odd-parity circuit on the next page.

(2) The optional large binary adder at the end of the experiment is so arranged that only two lamps per board are used. This means that the maximum capacity of the adder cannot be utilized (the sum of two n-digit binary numbers requires a maximum of n+1 lamps). However, it does demonstrate the capability of extending the basic circuit to as many stages as desired. It might be a good student exercise to modify the circuit to obtain maximum capacity. This could be done by adding the following wires on the last (most significant) board in place of the interboard wiring to the "next" board: Neg, A1c; A2c, L2.

(3) The instructions for the optional large binary adder suggest connecting a lamp to see the carry out of the most significant end. This might be done simply be adding a wire from A2c to L1.

(4) The wiring diagrams in this course follow two methods for indicating a crossover of wires with no electrical connection: either the "jumper," , or an intersection without a heavy dot, . Where one wire terminates at another, no ambiguity exists, so either or indicates a connection. Be sure your students understand this.

Answers to questions:

(*1)

A	B	a	$\bar{a}$	b	$\bar{b}$	$a \cdot \bar{b}$	$\bar{a} \cdot b$	L1
0	0	0	1	0	1	0	0	0
0	1	0	1	1	0	0	1	1
1	0	1	0	0	1	1	0	1
1	1	1	0	1	0	0	0	0

(*2) L1 lights only when an odd number of switches is operated.

(*3) Connect terminal 1b of switch A to terminal 1m of switch B. Connect lamp L1 to terminal 1c of switch B.

(*4)

A	B	C	L1
0	0	0	0
0	0	1	1
0	1	0	1
0	1	1	0
1	0	0	1
1	0	1	0
1	1	0	0
1	1	1	1

(*5)

A	B	C	L1
0	0	0	0
0	0	1	0
0	1	0	0
0	1	1	1
1	0	0	0
1	0	1	1
1	1	0	1
1	1	1	1

(*6)

A	B	C	D	L2	L3	L4
0	0	0	0	0	0	0
0	0	0	1	0	0	1
0	0	1	0	0	1	0
0	0	1	1	0	1	1
0	1	0	0	0	0	1
0	1	0	1	0	1	0
0	1	1	0	0	1	1
0	1	1	1	1	0	0
1	0	0	0	0	1	0
1	0	0	1	0	1	1
1	0	1	0	1	0	0
1	0	1	1	1	0	1
1	1	0	0	0	1	1
1	1	0	1	1	0	0
1	1	1	0	1	0	1
1	1	1	1	1	1	0

(*7) Yes; L2 could be wired directly in place of R. (But note that relay R <u>is</u> needed in the large binary adder which follows.)

<u>Post-lab discussion:</u> Follow-up discussion of the circuits. Be sure students understand operation of adder circuit.

<u>Evaluation:</u> Same as for Exp. I.

<u>Subsequent activities:</u> None, except the optional binary adder.

EXPERIMENT III - More Circuits That Do Not Require Memory

Purpose: To illustrate the use of a logic-circuit to model a problem; to introduce more circuits used in computers.

Scheduling: After discussion of circuits in class (see scheduling note for Exp. II.)

Equipment: Logic circuit boards.

Pre-lab discussion: (1) Emphasize that the river-crossing circuit does not solve the problem. It is a model of the problem which enables you to test possible solutions. Be sure students understand the logic of the circuit.

(2) It might be necessary to point out in question *10 that the 9 switches represent the 9 positions on the team, and the 4 lamps represent the number of outs.

Hints: Some students may need help with the wiring changes in the binary-to-decimal translation circuit.

Answer to questions:

(*1)

	SWITCHES			
STEP	A (GOAT)	B (BOATMAN)	C (CABBAGE)	D (WOLF)
Initial	0	0	0	0
1	1	1	0	0
2	1	0	0	0
3	1	1	1(0)	0(1)
4	0	0	1(0)	0(1)
5	0	1	1	1
6	0	0	1	1
Final	1	1	1	1

Fig. 2 Solution to River Crossing Problem
The alternate solution is indicated in parentheses.

(*2) Because he is rowing back and forth across the river.

(*3) C and D.

(*4) The positions of cabbage and wolf can be interchanged.

(*5)

A	B	L1	L2	L3	L4
0	0	1	0	0	0
0	1	0	1	0	0
1	0	0	0	1	0
1	1	0	0	0	1

Fig. 4 Truth Table for 2-Stage Tree

(*6) No.

(*7)

	A	B	C	D	L0	L1	L2	L3	L4	L5	L6	L7	L8	L9
0	0	0	0	0	1	0	0	0	0	0	0	0	0	0
1	0	0	0	1	0	1	0	0	0	0	0	0	0	0
2	0	0	1	0	0	0	1	0	0	0	0	0	0	0
3	0	0	1	1	0	0	0	1	0	0	0	0	0	0
4	0	1	0	0	0	0	0	0	1	0	0	0	0	0
5	0	1	0	1	0	0	0	0	0	1	0	0	0	0
6	0	1	1	0	0	0	0	0	0	0	1	0	0	0
7	0	1	1	1	0	0	0	0	0	0	0	1	0	0
8	1	0	0	0	0	0	0	0	0	0	0	0	1	0
9	1	0	0	1	0	0	0	0	0	0	0	0	0	1
10	1	0	1	0	0	0	0	0	0	0	0	0	1	0
11	1	0	1	1	0	0	0	0	0	0	0	0	0	1
12	1	1	0	0	0	0	0	0	0	0	0	0	1	0
13	1	1	0	1	0	0	0	0	0	0	0	0	0	1
14	1	1	1	0	0	0	0	0	0	0	0	0	1	0
15	1	1	1	1	0	0	0	0	0	0	0	0	0	1

Figure 6

(*8) Add $\bar{b}$ and $\bar{c}$ contacts in series with both L8 and L9.

(*9)

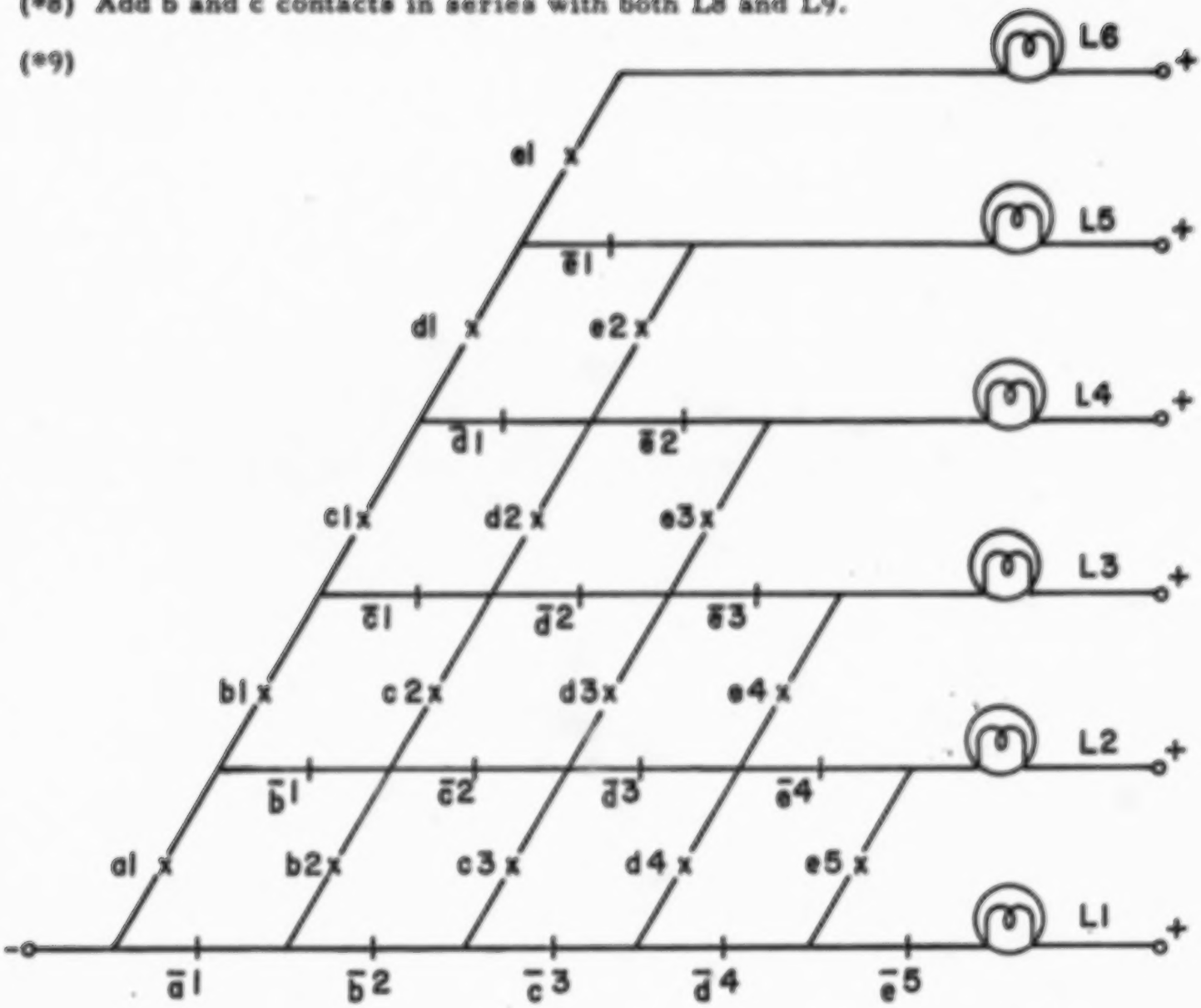

(*10)

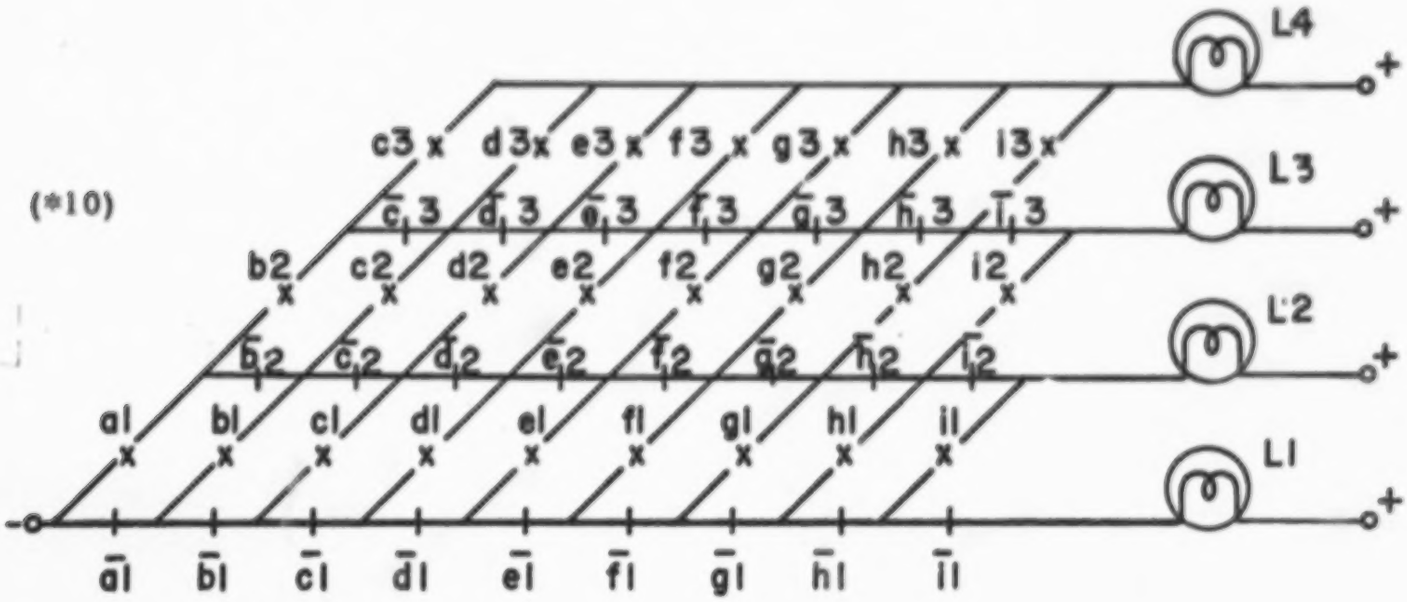

Post-lab discussion: Discussion of answers to questions.

Evaluation: See comment in Exp. I.

Subsequent activities: (1) The circuit in Fig. 8 on the next page is an extension of the tree circuit to convert binary numbers to decimal up to 15. Note that relays R and S are used simply to gain sufficient contacts for switch D.

(2) For your more advanced students "function circuits" will present an interesting challenge. In these circuits the switch settings represent the value assigned to a variable, and the lamps represent the corresponding value of the function in which the variable appears, both values in binary, of course. For example, consider the simple function circuit in Fig. 9. (For newer logic circuit boards, use L1 on a second board to represent L5; connect the negatives of the two boards together.)

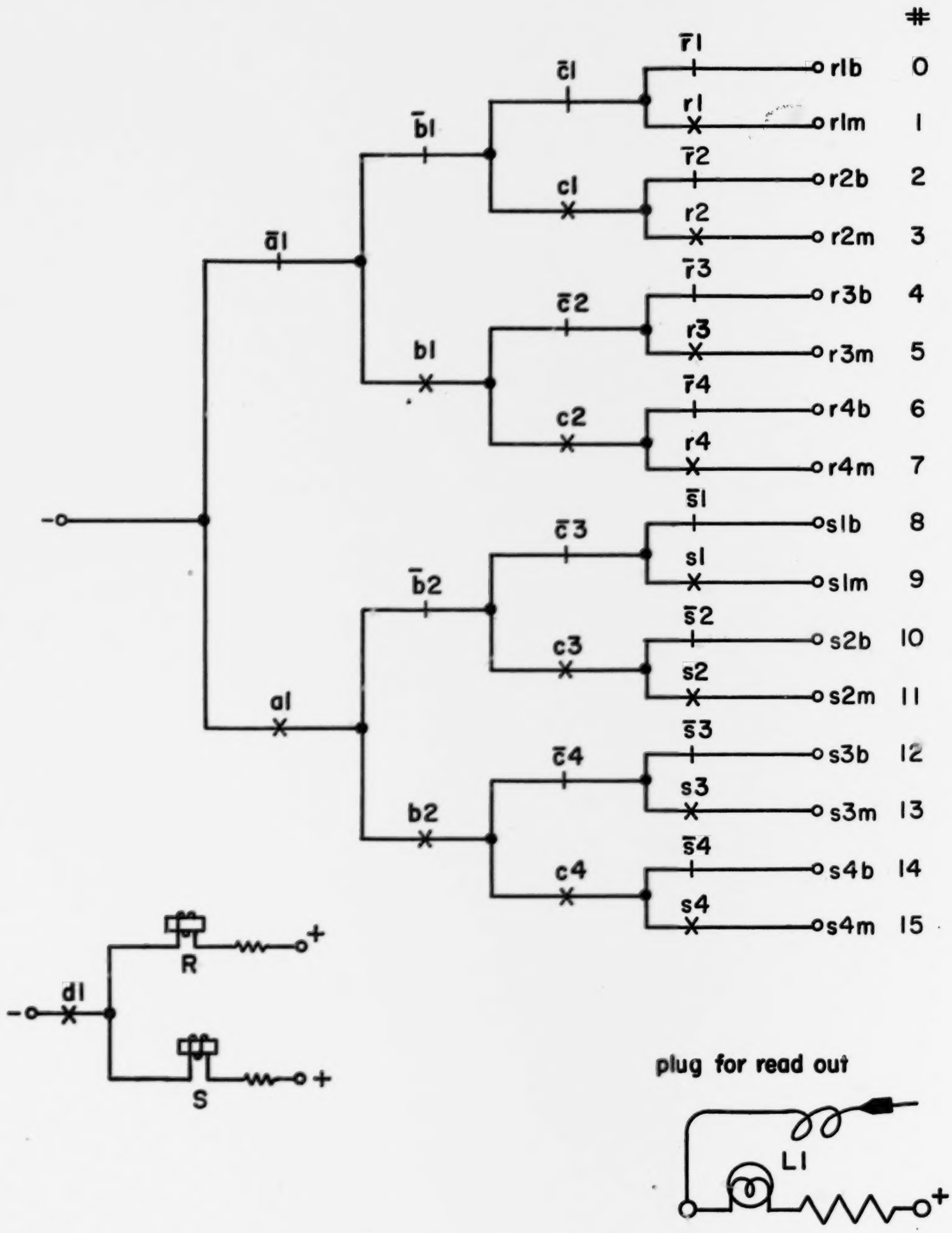

FIG. 8 EXTENDED TREE CIRCUIT

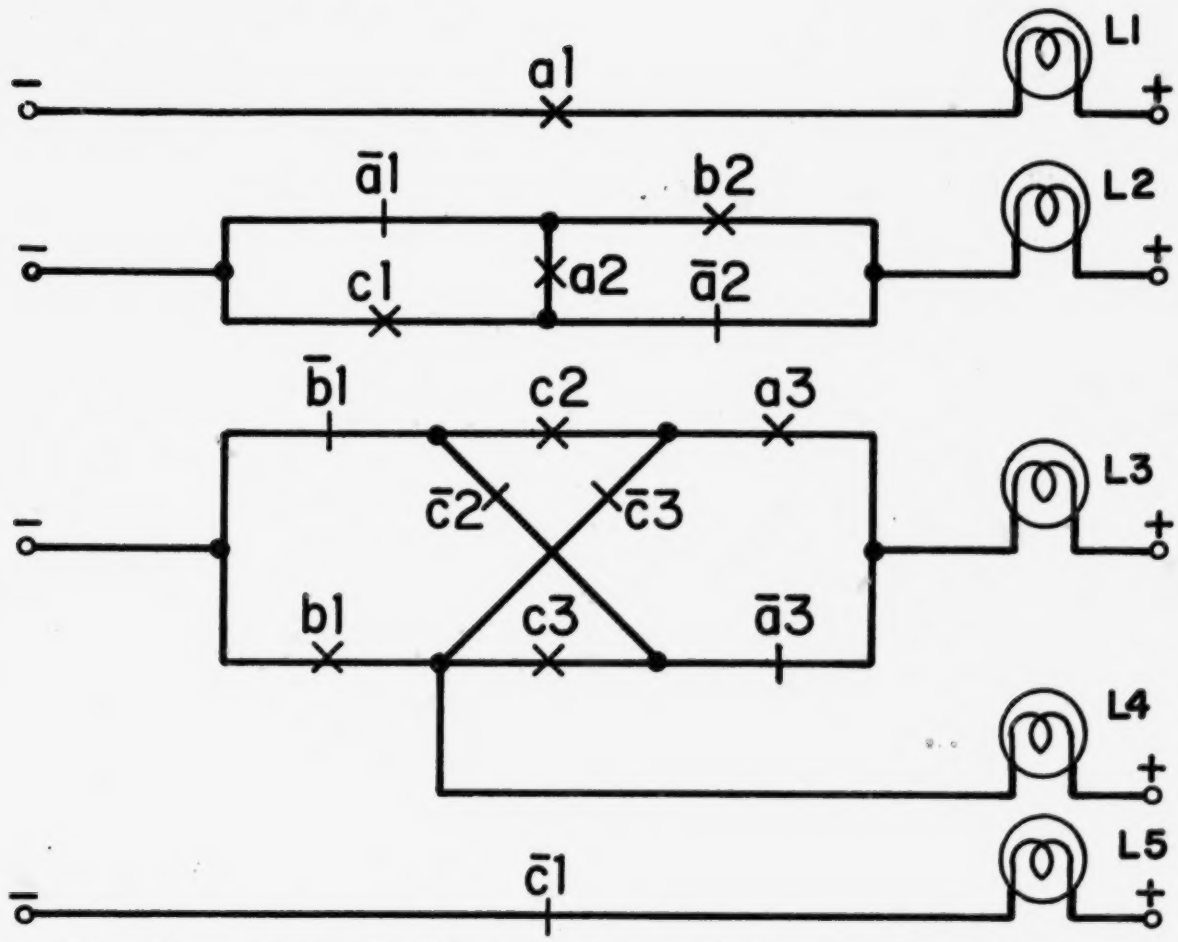

Fig. 9 Circuit Diagram for an Unknown Function

The truth table for this circuit is given in Fig. 10. Examination of the values will show that the function is 3 x + 5.

A	B	C	L1	L2	L3	L4	L5
0	0	0	0	0	1	0	1
0	0	1	0	1	0	0	0
0	1	0	0	1	0	1	1
0	1	1	0	1	1	1	0
1	0	0	1	0	0	0	1
1	0	1	1	0	1	0	0
1	1	0	1	0	1	1	1
1	1	1	1	1	0	1	0

Fig. 10 Truth table for circuit of Fig. 9

A more difficult function circuit is shown in Fig. 11. The corresponding truth table is given in Fig. 12. On this example the function is $\frac{x^3}{3} - \frac{3x^2}{2} - \frac{17x}{6} + 19$.

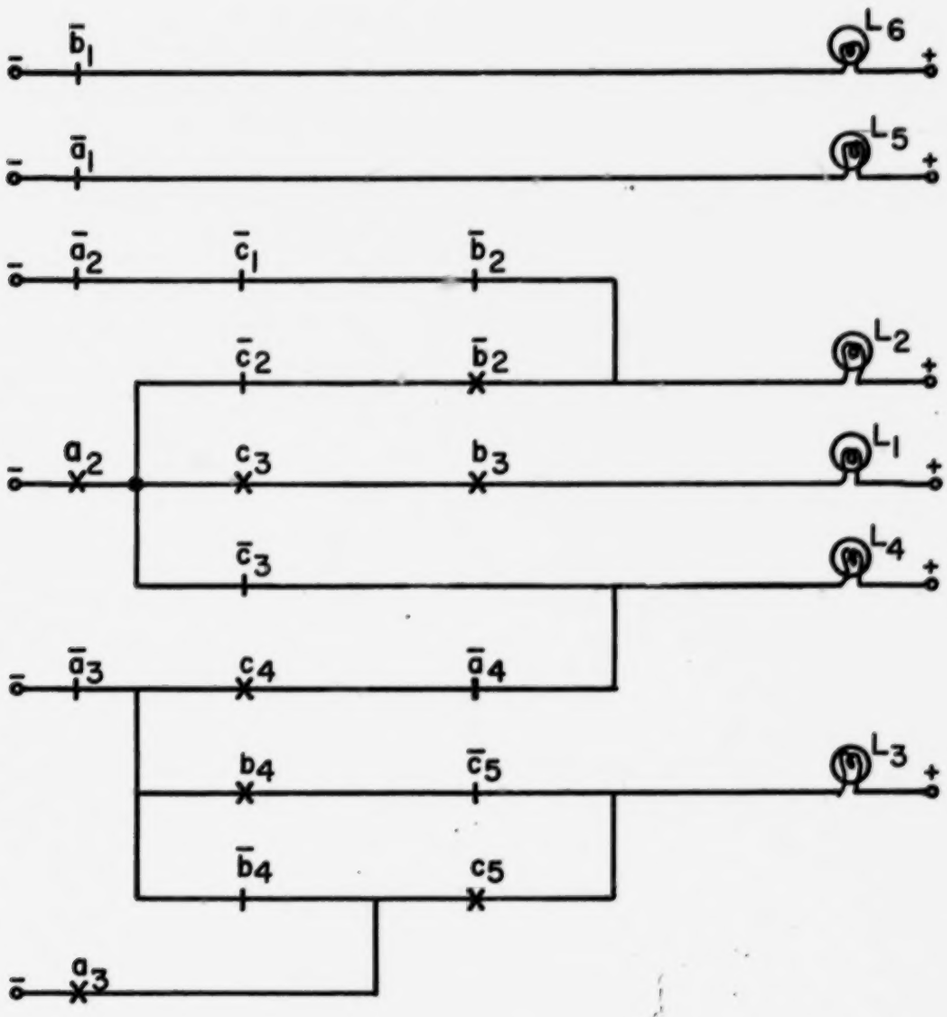

Fig. 11 A More Difficult Function Circuit

A	B	C	L_1	L_2	L_3	L_4	L_5	L_6
0	0	0	0	1	0	0	1	1
0	0	1	0	0	1	1	1	1
0	1	0	0	0	1	0	1	0
0	1	1	0	0	0	1	1	0
1	0	0	0	0	0	1	0	1
1	0	1	0	0	1	0	0	1
1	1	0	0	1	0	1	0	0
1	1	1	1	0	1	0	0	0

Fig. 12 Truth Table for Circuit of Fig. 11

EXPERIMENT IV - Circuits with Memory

Purpose: To introduce the idea of feedback in logic circuits; to illustrate stable and unstable circuits; to show simple memory circuits.

Scheduling: After discussion of these circuits in class.

Equipment: Logic circuit boards.

Pre-lab discussion: (1) Remind students of the way the relay coils are internally wired on the LCB. Some have trouble understanding the electrical connection of the "sh" terminal.

(2) You may wish to instruct the students not to allow unstable circuits to buzz for undue periods of time. If they are typical students, they are fascinated by the noise.

(3) If you are using the older model LCB's, remind students to use the alternate running lists where given.

(4) Some students may need to be told how to "short out" a contact (last part of section 2).

Hints: None.

Answers to questions:

(*1) The circuit of Fig. 1 (a) buzzes faster. The reason is that with series control the relay arm need only move away from the break contact to release the relay; with shunt control the arm must move to the make contact to release the relay. Since the arm movement is less in the former case, the buzzing is faster.

(*2) Momentarily disconnect the $\overline{q}$ contact; Q will operate and remain operated.

(*3) Unstable.

(*4) This makes it stable.

(*5) Two. Momentarily connecting Sop to Neg will cause all the relays to operate and remain operated.

(*6) Address of relay R is 10; S is 11.

Post-lab discussion: Be sure students understand memory circuits.

Evaluation: See comment in Exp. I.

Subsequent activities: (1) The airport runway circuit, Fig. 6, is a simple demonstration of feedback. Although the circuit is shown for only one LCB, it will be much more dramatic if extended to a number of boards. Note simply that a make contact from one relay is used to operate the next relay, and that a break contact from the last relay is placed in series with the first. Connect the negative of one board to the negative of the next.

(2) The electrical combination lock, Fig. 7, is an interesting example of a memory circuit. The purpose is to determine the sequence of operations of switches A, B, C, and D which will light the lamp (i.e., unlock the lock). Only one operation (either "on" or "off") of one switch is permitted at each step. One way of presenting this might be to give the students the circuit and have them analyze it to determine the combination. One board might be left wired for them to test their solutions. An analysis of the circuit is given in Fig. 8.

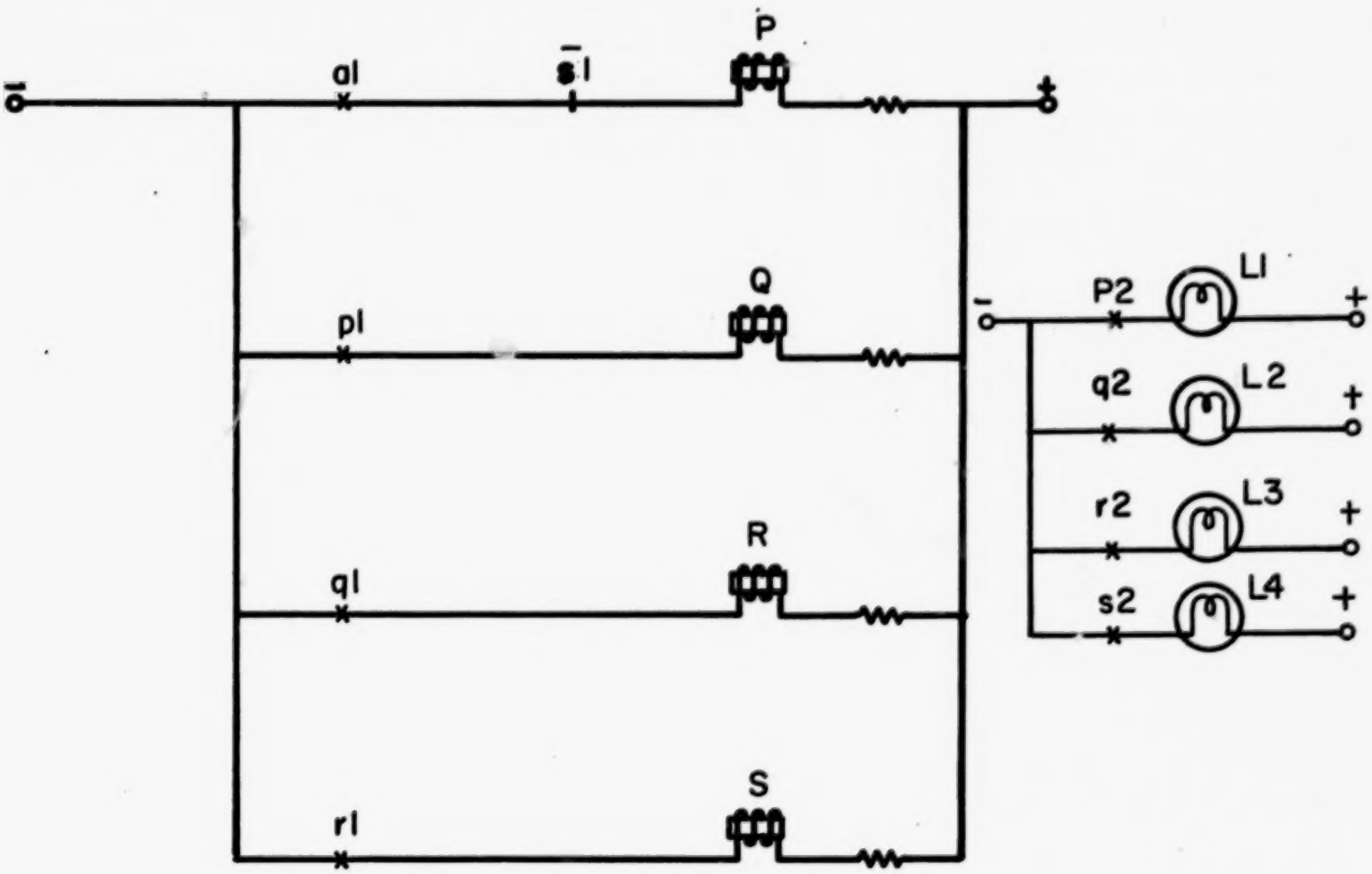

Fig. 6 Airport Runway Circuit

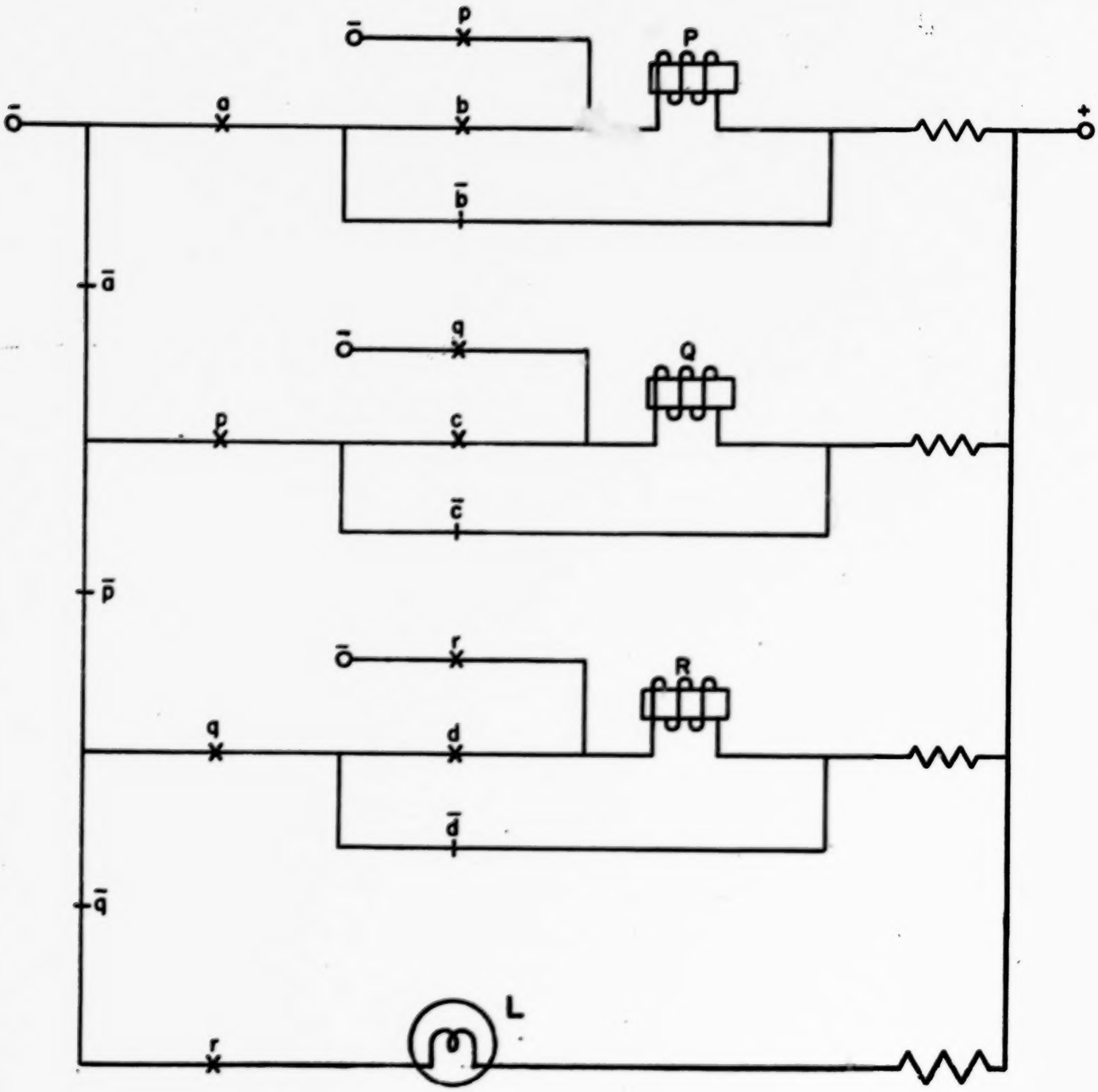

Fig. 7 Electrical Combination Lock

Step No.	A	B	C	D	P	Q	R	S	L
0	0	0	0	0	0	0	0	0	0
1	1	0	0	0	0	0	0	0	0
2	1	1	0	0	1	0	0	0	0
3	0	1	0	0	1	0	0	0	0
4	0	1	1	0	1	1	0	0	0
5	1	1	1	0	1	1	0	0	0
6	1	0	1	0	0	1	0	0	0
7	0	0	1	0	0	1	0	0	0
8	0	0	1	1	0	1	1	0	0
9	1	0	1	1	0	1	1	0	0
10	1	1	1	1	1	1	1	0	0
11	0	1	1	1	1	1	1	0	0
12	0	1	0	1	1	0	1	0	0
13	1	1	0	1	1	0	1	0	0
14	1	0	0	1	0	0	1	0	0
15	0	0	0	1	0	0	1	0	1

Fig. 8 Analysis of Electrical Combination Lock

EXPERIMENT V - Circuits with Memory; Counting and Shifting

Purpose: To illustrate counting and shifting circuits.

Scheduling: After discussion of these circuits in class.

Equipment: Logic circuit boards.

Pre-lab discussion: (1) Remind students of precautionary note in lab manual concerning manipulation of switch D (see hint below).

Hints: (1) A slow release of switch D in the single stage counter (Fig. 1) when going from time 4 to time 5 (Fig. 2) may cause an erroneous result. If d2, which is shunting relay R, opens slightly before d1, relay R may have time to operate through d1 before d1 opens. You may wish to have students try this and propose an explanation before you discuss it.

(2) Some students may have difficulty extending the two stage counter to four stages, (optional part 3). Point out that using q2 and q3 on the first board to drive the R-S stage on the next board is analogous to using d1 and d2 to drive the R-S stage on the first board. A running list for the four stage counter is as follows (assuming both boards initially wired as two stage counters):

First Board:	Add: Neg, Q2c, Q3c
Next board:	Remove: Neg, D3c, D2c, D1c; D3m, L3; D1m, Sop; D2m, S1c
Interboard wiring:	Neg (1st), Neg (next); Q2m (1st), Sop (next); Q3m (1st), S1c (next)

Ambitious students can extend this to as many boards as you have.

(3) Students may also encounter difficulty extending the two stage shift register to four stages (optional part 5). Point out that the D3 and D4 contacts on the first board are substituted for the D1 and D2 contacts on the second board; likewise the S2 contacts on the first board are substituted for the A2 contacts on the next board. A running list for the four stage shift register is as follows (assuming both boards initially wired as two stage shift registers):

First board:	Add: Neg, D3c, D4c; D3m, S2c
Next board:	Remove: D1c, D2c, S3c; D1m, A2c; D1b, P2c; A2m, P1m; A2b, Psh; D2m, Q2c; D2b, R2c; Neg, A3c, P1c; A3m, L1
	Add: Neg, P1c
Interboard wiring:	Neg (1st), Neg (next); S2m (1st), P1m (next); S2b (1st), Psh (next); D3b (1st), P2c (next); D4m (1st), Q2c (next); D4b (1st), R2c (next)

Answers to questions:

(*1)

TIME	0	1	2	3	4	5	6	7	8
F	0	1	0	1	0	1	0	1	0
T	0	1	1	0	0	1	1	0	0
U	0	0	1	1	0	0	1	1	0

Fig. 2 Sequence Chart for Single Stage Counter

(*2)

TIME	0	1	2	3	4	5	6	7	8
Q	0	0	0	0	1	1	1	1	0
S	0	0	1	1	0	0	1	1	0
D	0	1	0	1	0	1	0	1	0

Fig. 4 Sequence Chart for Two Stage Counter

(*3) Counts backward.

Post-lab discussion: Be sure students understand counting and shifting circuits.

Evaluation: See comment on Exp. I.

Subsequent activities: If some students are still fascinated by the LCB, encourage them to design circuits of their own. If they find some interesting ones send a copy to ECCP.

EXPERIMENTS VI AND VI-A - An Automatic Morse Code Transmitter

Purpose: To construct a circuit which is analagous to the control unit of a computer.

Scheduling: During Chapter A-5.

Equipment: Logic circuit boards.

Pre-lab discussion: (1) Point out the similarity between the function of this circuit and the "operation decoder" in the computer.

(2) Emphasize the desirability of wiring the circuit in sections, as outlined in the instructions.

(3) If you have the older model LCB's, be sure your students follow Experiment VI-A. Note that the logic of VI-A is somewhat different from that of VI in that the former begins with A = 001 instead of A = 000. The principle, however, is the same.

Hints: (1) Allow plenty of time for students to do this experiment. The wiring is involved, but if they do it in sections and check it carefully they should have little trouble.

Answers to questions: (*1) Five.
(*2) Two.
(*3) Three.

Post-lab discussion: None.

Evaluation: None.

Subsequent activities: Students may wish to design their own circuits to perform similar functions.

EXPERIMENT VII - Introduction to CARDIAC

Purpose: To see how the simple computer described in the text functions; to introduce some elementary programming ideas.

Scheduling: During Chapter A-6.

Equipment: CARDIAC's with special pencils; paper tissue or small cloths.

Pre-lab discussion: (1) Emphasize need for care in using the CARDIAC. Use only special pencils and don't press too hard when writing. Take care not to lose the Bugs.

(2) Remind students to follow CARDIAC's directions exactly. There is no place for judgment.

Hints: (1) Students are likely to become bored with CARDIAC very quickly. For the loading program, you may wish to have them complete only enough cycles to see how the loading program works. They can then copy the remainder of the program to be executed directly into memory and execute as much of it as you wish.

(2) Any 9--instruction will cause a halt and reset to 00. The overflow feature of the 9--instruction does not work on CARDIAC.

Answers to questions: No questions asked.

Post-lab discussion: None needed.

Evaluation: None.

Subsequent activities: None.

EXPERIMENT VIII - Double Precision Subroutine

Purpose: To show how a program can be devised to extend CARDIAC's capacity from three digits to six.

Scheduling: During Chapter A-6 (optional experiment).

Equipment: CARDIACs and special pencils; paper tissue or small cloths.

Pre-lab discussion: See Experiment VII.

Hints: Unless your students show considerable enthusiasm for CARDIAC after completion of Experiment VII, this experiment may well be omitted.

Answers to questions:

(*1) 120
221
622
403
623
900

(*2) Yes.

(*3) No.

(*4) It fails during subtraction if subtracting the "leasts" results in a negative answer.

(*5) By a subroutine similar to that in *1.

(*6)

80	404
81	797
82	697
83	404
84	798
85	698

Post-lab discussion: Discussion of answers to questions.

Evaluation: None needed.

Subsequent activities: None.

EXPERIMENT IX - The Farmer and the Field

Purpose: To solve an optimization problem by using the four elements of decision making.

Scheduling: After Section 1 of Chapter B-1.

Pre-lab discussion: Understanding of section 1 of chapter B-1 is sufficient preparation before doing this experiment.

Hints: Take two standard 6-inch pipe cleaners and join them end to end. Use 10 of the 12 inches that are now available and let 1 inch = 100 ft. Have students work on graph (standard quadrille) that has four boxes to the inch.

Answers to Questions:

(*1) Criterion - Maximum area.

(*2) Constraints - (a) 1000 ft. of wire (b) rectangular shape.

(*3) Maximum area rectangle is one where b = 2a; using the scale 1 in. = 100 ft.
a = 2.5 in., b = 5 in.
$\therefore A = bh = 2.5(5) = 12.5 \text{ in}^2 \ (125,000 \text{ ft}^2)$

(*4) The curved shape that results in maximum area is a semi-circle.

$$\text{A CIRCLE} = \pi r^2. \qquad \text{CIRCUMFERENCE (C)} = 2\pi r \ \therefore r = C/2\pi$$

$$\therefore \text{A SEMICIRCLE} = \frac{\pi r^2}{2} = \frac{\pi (C/2\pi)^2}{2}$$

$$A = \frac{c^2}{8\pi} = \frac{(20)^2}{8(3.14)} = 15.9 \text{ in}^2$$

(*5) $A = Pa - 2a^2$

a (feet)	A (ft^2)
0	0
50	45,000
100	80,000
150	105,000
200	120,000
250	125,000
300	120,000
350	105,000
400	80,000
450	45,000
500	0

If the students are careful, the scale model results should not differ from the graphic model results by more than 5%.

(*5) Cont'd

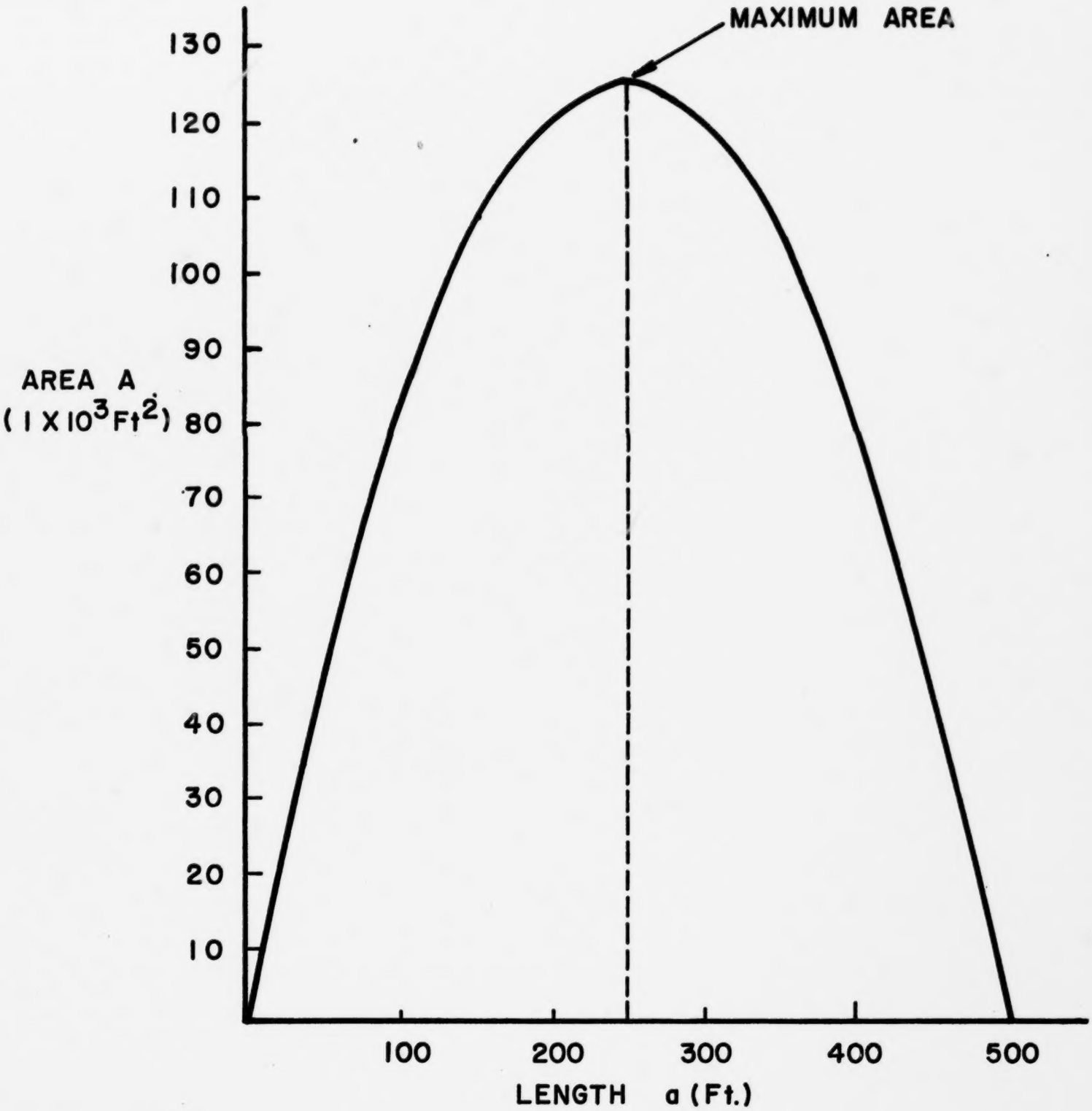

(*6) a = 250 ft.
since 1000 = 2 a + b
b = 500 ft.

Post-lab discussion: Discuss the advantages and disadvantages of a scale model, mathematical model and graphic model.

Evaluation: This experiment lends itself very well to the writing of a lab report.

Subsequent activities: To a chicken house, 100 feet long, a man wants to add a yard with 400 feet of fence attached to the two front ends of the chicken house. What is the shape and area of the largest yard he can enclose?

The greatest area will be part of a circle and will contain approximately 19,325 ft^2. (This obviously does not lend itself to simple mathematical solution, but only to trial and error with pipe cleaners on a graph paper background.)

EXPERIMENT X - Design of a Remote Heater

Purpose: (1) Modeling of a physical problem.

(2) Analysis of the data taken from the model to find the optimum solution to the problem.

Scheduling: At the end of Section 1 of Chapter B-2.
or At the end of Section 4 of Chapter B-2.

Pre-lab discussion: Review the major concepts of Chapter B-1.

Hints: (1) If laboratory time is short, data can be taken in school and the analysis can be done at home.

(2) Use candles that are as small as obtainable.

Answers to questions:

(*1) Sample data:

Resistance	Time
300 ohms	225 sec.
120 ohms	125 sec.
82 ohms	100 sec.
39 ohms	180 sec.
20 ohms	about 600 sec.

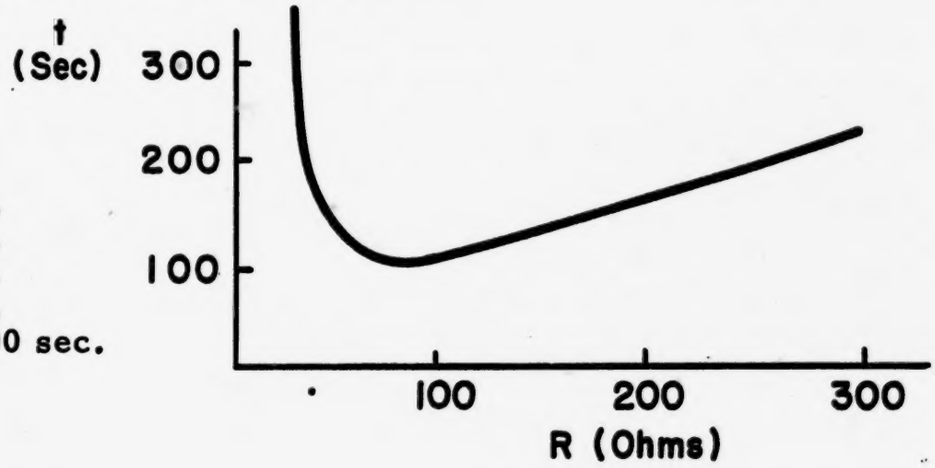

(*2) Yes, the turning point on the graph occurs at about 82 ohms.

(*3)

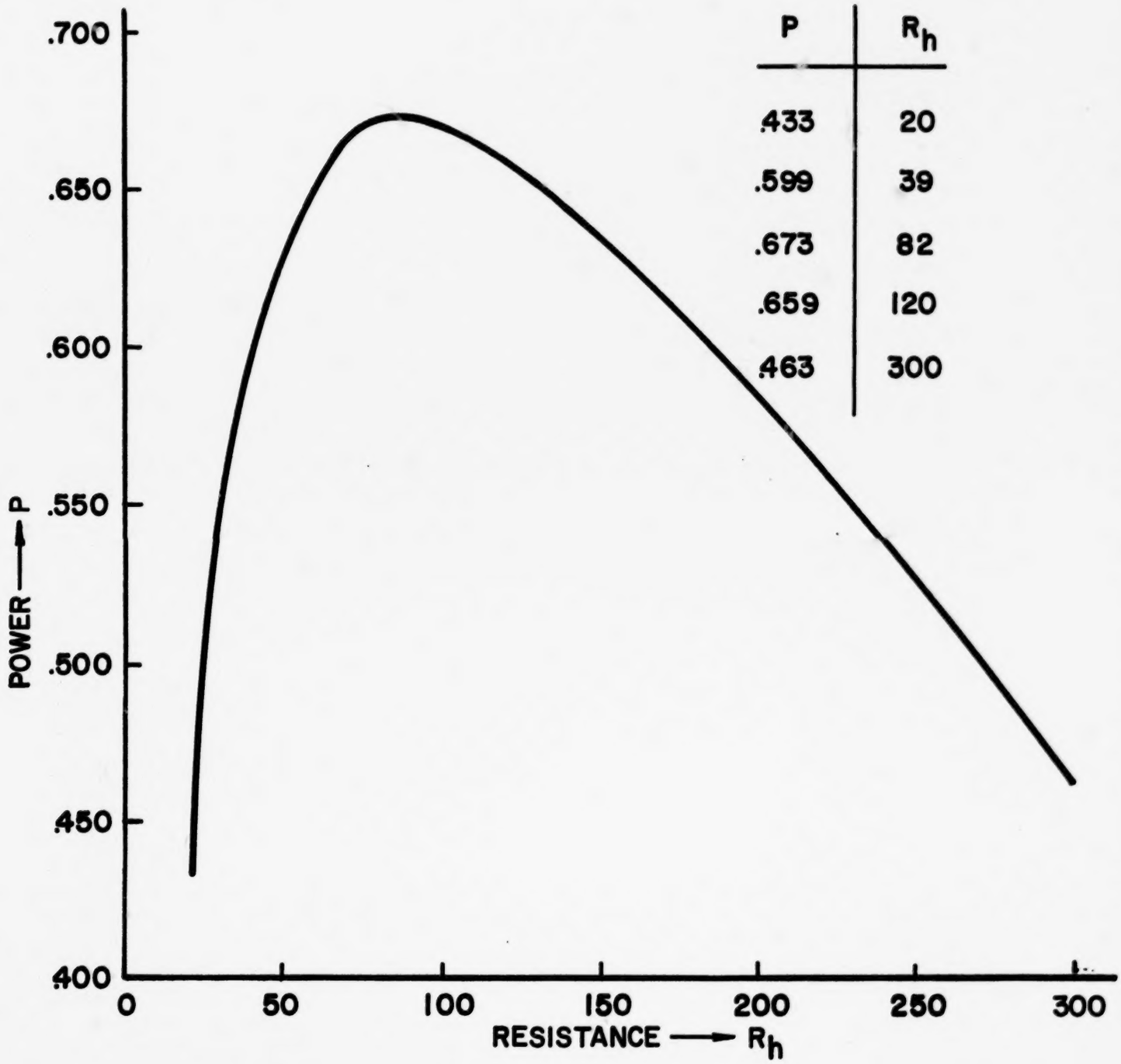

P	R_h
.433	20
.599	39
.673	82
.659	120
.463	300

(*4) R_h = 82 ohms; R_h (computed) = R_h experimental.

(*5) In general, R = R_h.

<u>Post-lab discussion</u>: If there is a mathematical model of the problem, why is it necessary to do the simulation?

The simulation established the validity of using the general mathematical model of this problem. Once this is done, the mathematical model can be used for all future problems of this type.

Evaluation: Lab report.

Subsequent activities: Derive $P \propto \frac{E^2 R_h}{(R_h + R)^2}$

(1) $P \propto I^2 R_h$

(2) $E = I(R + R_h)$

(3) $I = \frac{E}{R + R_h}$

(4) $P \propto \left(\frac{E}{R + R_h}\right)^2 R_h$

(5) $P \propto \frac{E^2 R_h}{(R_h + R)^2}$

EXPERIMENT XI

Queueing

Purpose: 1. To test the mathematical queueing model against the real world.

2. To use the mathematical formulas to shorten average queue lengths.

Scheduling: At the end of Section 7 of Chapter B-2.

Pre-lab discussion: Make sure that students have a good understanding of the queueing section of chapter B-2.

Hints: Obviously, the system or systems chosen must be able to operate under the standard constraints. Probably the most difficult of these to ensure, especially under the conditions that exist in schools, is that of the "steady state". Certainly the queue at the drinking fountain does not satisfy. Cars entering, from a side street, a fairly busy intersection which has no traffic light might do so.

Answers to questions:

(*1) Constraints of problem are:

(a) there should be only one line;

(b) customers must arrive at random;

(c) data must be taken during steady-state operation.

Post-lab discussion: Discuss the reasons for difference between observed data and calculated results of average queue length. Main reason is that model is too simplified.

Evaluation: Lab report (written or oral).

Subsequent activities: How can the model be improved to represent the real world better? A more refined mathematical model for the situation when the servicing time is random is:

$$q = \frac{\beta\left(1 - \frac{\beta}{2}\right) + \frac{1}{2}\beta^2 V^2}{1 - \beta}$$

where the new factor V is defined as follows:

$$V = \frac{\text{standard deviation of servicing time}}{\text{mean servicing time}}$$

EXPERIMENT XII

Is it an Elephant?

Purpose: To illustrate the concept that it is difficult to build a model of the real world without complete information.

Scheduling: At the beginning of Chapter B-3.

Equipment: Small box, nuts and bolts, eye dropper, cotton immersed in something with an odor, etc.

Pre-lab discussion: None.

Hints:

1. First have the students make individual predictions about the contents of the container.

2. Then have the students in groups of two or three pool their information.

3. Finally have the whole class decide on the nature of the contents of the container.

Answers to questions: Have the student answer the discussion questions individually and then discuss the questions as a class.

(a) Make a model (in this case an outline) of the ideas to be tested. Then make sample questions based on the model.

(b) Yes, if you keep in mind the following:
(1) subject being studied
(2) amount of time spent on studying
(3) type of teacher
(4) relative difficulty of different parts of the course.
These factors are applicable to all subjects.

(c) Yes, to the extent that they measure a student's potential to do college level work. This examination is one of the many tools (models) that a college admissions officer uses in making a decision.

Post-lab discussion: Place the block diagram of model-making on the blackboard and ask students to analyze this experiment in relation to the diagram.

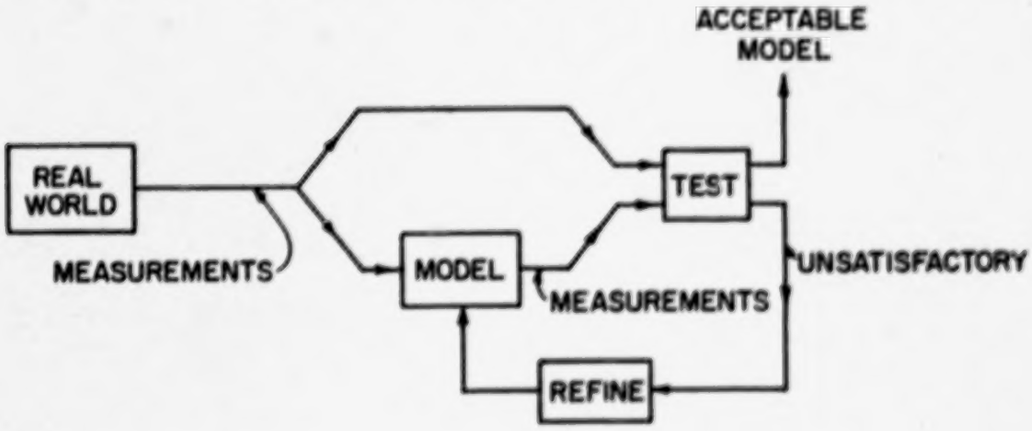

Evaluation: Use post-lab discussion.

Subsequent activities: None.

EXPERIMENT XIII

Measurement, Modeling and Prediction

Purpose: To demonstrate the use of models as an aid to prediction of future needs.

Scheduling: After the study of Section 2, Ch. B-3.

Equipment: Data on heights of students.

Pre-lab discussion: Brief discussion of introduction to experiment.

Hints: Having the students plot a graph of number of students (x-axis) vs height (y-axis) may be useful in developing the idea of graphic models.

Answers to questions: There are no set answers to the questions asked in the section entitled Additional Comment. These questions could be used for post-lab discussion.

Post-lab discussion: Refer to above.

Evaluation: This is a good experiment for a written laboratory report.

Subsequent activities: Compare the projected values of gown sizes for the junior class to the gown sizes of the current senior class.

EXPERIMENT XIV

Traffic Flow

Purpose: To simulate a real world problem (traffic flow) by a graphic model and to show how the model can be used for prediction.

Scheduling: After the study of Section 3, Ch. B-3.

Equipment: Average college-bound students who can count.

Pre-lab discussion: Discuss the importance of having a technique for studying traffic flow.

Hints:

1. Have students work in groups and make sure that they are organized for data taking.

2. There is a need for a constant time interval indicator (e.g. student with watch, bell, light, etc.)

Answers to questions: What are some of the factors which could affect the model you used for your prediction?

1. lunch periods.
2. students walking back and forth.
3. difference in time interval for counting.
4. double-period classes.

Post-lab discussion: Discussion of above question.

Evaluation: Laboratory report.

Subsequent activity: Study of traffic flow outside of school as suggested in the Additional Comments section.

EXPERIMENT XV

Introduction to the Polylab

Purpose: The student gets his first look at the Polylab but does not operate it.

Scheduling: End of Chapter B-3 or beginning of Chapter B-4.

Pre-lab discussion: Have students read the experiment before class.

Hints: Do not allow students to plug in unit. In fact, this "experiment" is best done as a quick classroom demonstration before passing to XVI or XXIII, or to a general familiarization lab (see comment in TM for B-4).

Answers to Questions: No questions.

Post-lab discussion: Some students may be familiar with other uses of the CRO which they would explain to the class.

Evaluation: No report or evaluation necessary.

Subsequent activities: None.

EXPERIMENT XVI

Familiarization with the Electronic Voltmeter

Purpose: Part A

Measurement of a constant electrical signal with the electronic voltmeter.

Part B

Ditto except the signal is varied and the correct range is selected.

Scheduling: Following Exp. XV, at any time after Section 1: Introduction (Chapter B-4).

Equipment: Polylab 1 and Analog Computer.

Pre-lab discussion:

1. Students should have read the experiment before class discussion.

2. Past experience shows that one of the greatest dangers to the equipment is the tendency of the student to plug a transfer lead from the "+" on the Analog to the red "+15" on the power supply. (Note (6) that the lead should be plugged into the INPUT terminal on the VOLTMETER.) The teacher should demonstrate the correct terminal.

Hints:

1. The student may have difficulty (2) & (8) in adjusting the voltmeter to read zero. Check the manual adjustment on the voltmeter and correct (1) if necessary. The instructions not to touch a transfer lead while zeroing, and not to leave one plugged into the meter with the other end adrift, are to avoid errors which seem to be caused by capacitance effects.

2. The + and - signals (9) should be the same but may differ by as much as a volt.

Answers to questions:

(*9) + signal: 14 $\pm$ 1 volts
- signal: 14 $\mp$ 1 volts

(*13) + 9.5 $\pm$ 1 volt

(*14) - 9.5 $\pm$ 1 volt

(*17)

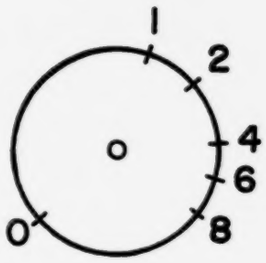

Post-lab discussion: Since the Polylab and the Analog will be used together extensively, it might be suitable at this time to go briefly over the list of "goal" experiments (XXIV to XXVI) to help the student to recognize the importance of full understanding and appreciation of these instruments.

Evaluation: No report or evaluation necessary at this time. The teacher should supervise the laboratory experiment, offering help if necessary.

Subsequent activities: None.

EXPERIMENT XVII

Introduction to the Analog Computer

Purpose: To introduce the functions of the various components of the Analog Computer, the mathematical operations it can perform, and the symbols used to represent these operations.

Scheduling: Following Exp. XVI, at any time after Section 1: Introduction (Chapter B-4).

Equipment: Analog Computer (without patch or transfer leads).

Pre-lab discussion: The student should be instructed not to plug in the Analog Computer for this experiment.

Hints:

1. Ask the students to identify each part of the Analog Computer by name and location as you move about the room supervising the familiarization experiment.

2. Emphasize the + and - signs on the Adder and the - sign on the Integrator.

Answers to Questions: No questions.

Post-lab discussion: If any student should ask how to wire up the Analog Computer to obtain the solution to the equation $y = 4 + \int (0.3x)\, dt$, see Figure 1. (The Integrator computes the negative of the input signal so must be inputted into the negative Adder).

Evaluation: No report or evaluation necessary at this time.

Subsequent activities: None.

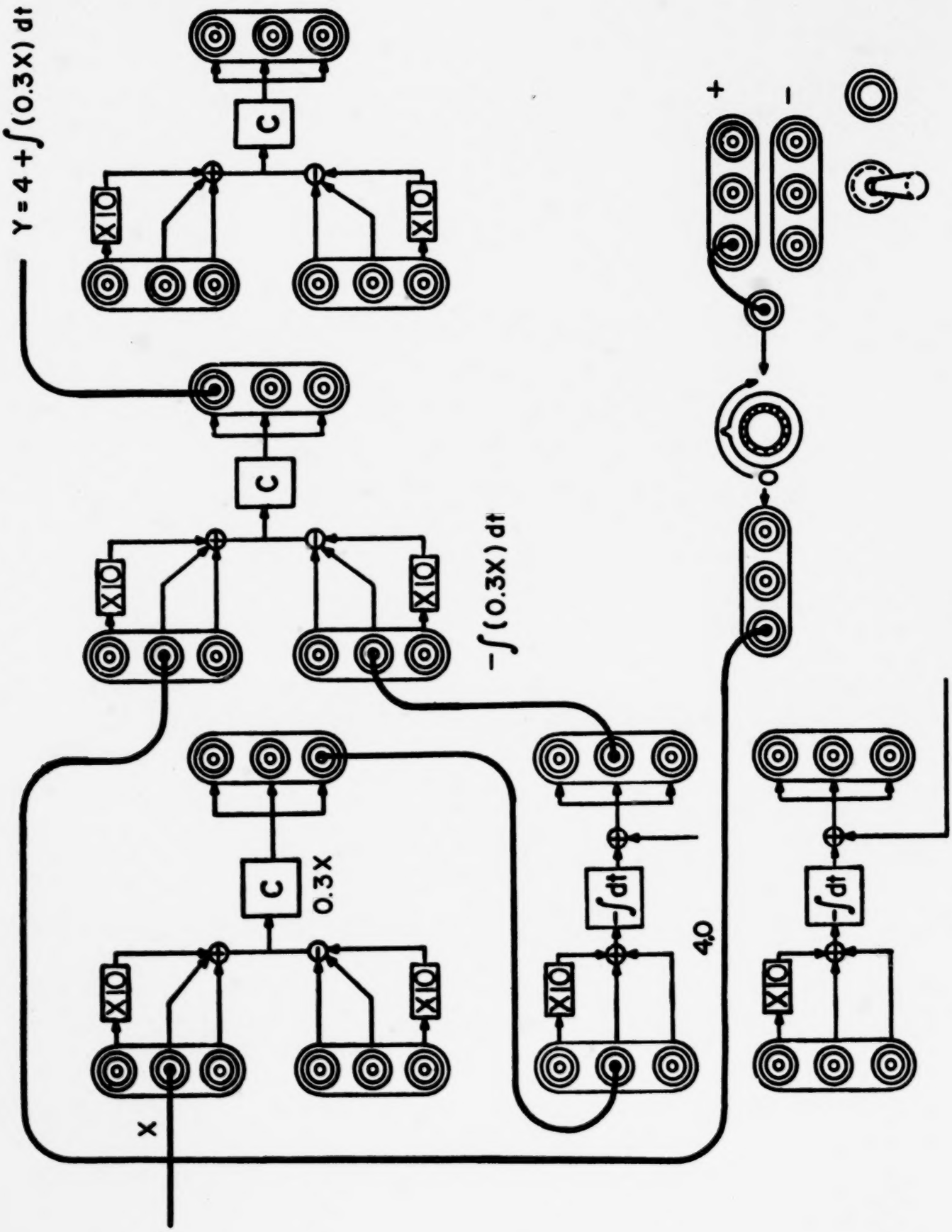

Figure 1

EXPERIMENT XVIII

Scaling on the Analog Computer

Purpose: To learn how scaling operations are performed on the Summing-Scalor part of the Analog Computer.

Scheduling: Following Exp. XVII, at any time after Section 3: Signals of Motion (Chapter B-4).

Equipment: Polylab 1 and Analog Computer.

Pre-lab discussion:

1. Students should have read the experiment before class discussion.

2. Remind the class that the Voltmeter may require frequent zeroing and that they should not touch the transfer lead while making the adjustment. If the lead is disconnected, let it lie on the table without touching the case or any wires.

3. Caution the class to select the correct Range on the Voltmeter before connecting the transfer lead.

4. Caution the class that an output signal larger than approximately 10-12 volts cannot be produced and to attempt this will result in errors. (Input terminals a or f, Fig. 1, should be avoided unless they are instructed to use these terminals for factors of + 10 and - 10 respectively.)

5. Help the students with at least one question - i.e. (*2), (*3,a), (*3,b) or (*3,c).

6. Emphasize that $C = \frac{\text{Value of Variable Scalor Output Signal}}{\text{Value of Variable Scalor Input Signal}}$

Hints:

1. On some Analog Computers, the Coefficient "C" cannot be set to a value of 1, so a value of a little less than 1 will have to be used.

2. Lettering a, b, c etc. with a felt pen on the face of the Analog Computer next to the input terminals may be helpful.

Answers to questions: (These may all be done before entering laboratory.)

(*2) - 10 x C x input signal

(*3,a) 0.5 x 4 = 2.0 volts

b) 0.3 x 8 = 2.4 volts

c) 0.6 (10 x 0.5) = 3.0 volts

(*4) zero

(*8) 1 ± 0.05
0

(*9) 1 ± 0.05
0

(*10) non-linear

(*12) 5.0 volts; yes

Post-lab discussion:

1. Go over answers to questions (*2), (*3, a, b, c) and (*4).

2. Check the answers to questions (*8) and (*9) for all Analog Computers and comment about the effect on future experiments if $C < 1$. Perhaps a felt pen reminder on the face of each Analog Computer for which $C < 1$ would be helpful in future experiments.

Evaluation: No report or evaluation necessary at this time. The teacher should supervise the laboratory experiment offering help if necessary.

Subsequent activities: None.

EXPERIMENT XIX

Adding on the Analog Computer

Purpose: To show how Analog Computer input signals can be added in solving algebraic equations.

Scheduling: Following Exp. XVIII, at any time after Section 3: Signals of Motion (Chapter B-4).

Equipment: Polylab 1 and Analog Computer.

Pre-lab discussion:

1. Students should have read the experiment before class discussion.

2. Remind the class that the Voltmeter should be zeroed frequently during the experiment.

3. The integrator output signal Y can be adjusted by pushing the red Set button while the Initial Condition knob is turned. This procedure should be demonstrated. It is not important that this condition be set initially. Both positive and negative voltages can be obtained so that the Range switch on the Voltmeter should be set at 25 and then changed to the appropriate scale.

4. Remind the class that a negative voltage input into the Negative Adder will result in a positive voltage output.

Hints: Remind the class to depress the SET button before any readings are taken.

Answers to questions:

(*2a) 2.0; (*2b) - 1.0; (*2c) 2.4; (*2d) 0; (*14a) 1.5; (*14b) 0.6; (*14c) - 1.3.

Post-lab discussion:

1. Go over answers to (*2a, b, c). (These may be worked out before entering laboratory).

2. A wide variety of answers may be found to question 14. If the labs are not collected, the teacher should get a response from the class to determine the range of values for Z and then discuss the reasons for such a wide variation (sometimes the components of the Analog Computers may be out of adjustment, though they are capable of results within 2% when in proper condition).

Evaluation: A simple report on the results of question 14 would be a method of determining which students performed the experiment.

Subsequent activities: None.

INTRODUCTION TO THE FILM NOTES

The film notes in this section result from the work of a number of ECCP teachers at the Polytechnic Institute of Brooklyn during the summer of 1967. All of the films were viewed by the group, which then considered their applicability to the ECCP course.

The films have been divided into three general categories: those which we highly recommend for development of certain concepts, those which are perhaps less outstanding but nevertheless good to consider, and those which are of more restricted usefulness. We have also included a list of films reviewed but not considered applicable to the ECCP course. This is in no way a commentary on the usefulness of these films for other courses.

Because of problems of production, the notes are arranged here in no particular order other than their assigned number. They are referred to by number in the main section of the Teacher's Guide.

While we have indicated a source for each film, some may be available in local film libraries. As with all materials of this type, you are advised to reserve them well in advance.

Some of the materials for the PSSC films are used with permission from the Teachers Guide to the PSSC Films, E.S.I., 1963.

CHANGE OF SCALE (PSSC FILM NO. 0106)

Recommendation: Optional film; use only if teacher is familiar with contents and wishes to develop the subject in class.

Summary: Demonstrates that change of size causes a change in physical characteristics of objects. Uses specially constructed props to emphasize scaling problem, then shows practical application of scale models as used in the construction of harbors, study of ship design, and moviemaking.

Application: During section on modeling.

Length & Type: 23 min., black & white, sound

Source: Modern Learning Aids ($6.00)

"THINKING" MACHINES

Recommendation: Good for limited application (see below).

Summary: Demonstrates approaches and experiments in machine "intelligence". Examples used are a mechanical mouse that learns by trial and error, a chess game against a computer, and a machine the recognizes visual patterns.

Application: Early in section on computers or as a bridge between computers and modeling.

Length & Type: 20 min., color, sound

Source: At least one audio-visual library in each state has this film. If unable to locate, write to Educational Testing Service, 20 Nassau Street, Princeton, New Jersey 08540, and ask for a list of film libraries which have the "Horizons of Science" series. Rental fees vary.

THE MATHEMATICIAN AND THE RIVER

Recommendation: Optional film; use only if additional emphasis on this subject is desired.

Summary: Uses a problem in applied science, flood control on the Mississippi River, to show the relationship between the "abstract" world of mathematics and the "real" world of nature.

Application: During section on modeling.

Length & Type: 18 min., color, sound

Source: At least one audio-visual library in each state has this film. If unable to locate, write to Educational Testing Service, 20 Nassau Street, Princeton, New Jersey 08540, and ask for list of film libraries which have the "Horizons of Science" series. Rental fees vary.

PROBLEMS AT PORT WASHINGTON

Recommendation: Good for illustrating physical models and the concept of model refinement.

Summary: Demonstrates effectiveness of a small-scale model to develop and test plans for reduction of storm-wave action in a Great Lakes harbor. Compares wave action in model and real world.

Application: Early in section on modeling.

Length & Type: 10 min., black & white, sound

Source: U.S. Army Engineer Waterways Experiment Station
P.O. Box 631
Vicksburg, Mississippi 39180
(no charge)

SPEAKING OF MODELS

Recommendation: Optional film; use only if more emphasis on physical models is desired. (Another film from the same source, PROBLEMS AT PORT WASHINGTON, illustrates the same concepts more briefly.)

Summary: Shows how hydraulic model studies aid in planning and design of Army Corps of Engineers projects for flood control, navigation, and hydroelectric power. Compares model with real world and shows some of the instrumentation involved.

Application: Early in section on modeling.

Length & Type: 24 min., color, sound

Source: U.S. Army Engineer Waterways Experiment Station
P.O. Box 631
Vicksburg, Mississippi 39180
(no charge)

DESIGN AUTOMATION AT IBM

Recommendation: Optional film; use only if this topic is of particular interest to class.

Summary: Shows the use of a data processing system as an aid in computer design and automatic control of production tools. (Commercial aspect is somewhat in evidence.)

Application: Perhaps as a link between computers and optimization.

Length & Type: 18 min., color, sound

Source: Modern Talking Pictures Service (New York, Chicago and Los Angeles offices only) (no charge)

INTRODUCTION TO FEEDBACK

Recommendation: Highly recommended for development of this concept.

Summary: Without going into technical detail, this film shows the wide application of feedback in many fields. The cycle of measuring, evaluating, and correcting is illustrated, and the consequences of overcorrecting are pointed out.

Application: Early in development of feedback concept.

Length & Type: 10 min., color, sound

Source: Modern Talking Picture Service (New York, Chicago and Los Angeles offices only) (no charge)

DAC-1

Recommendation: Good film for enrichment

Summary: Illustrates the flexibility now available in man-computer communication. Shows how a designer can feed an idea into the computer, see the results on a video screen, and then manipulate and modify the design as necessary. (DAC = Design Augmented by Computer.)

Application: Where appropriate for enrichment after some study of computers (either digital or analog).

Length & Type: 13 min., color, sound

Source: Film Library
General Motors Corporation
Public Relations Staff
3044 W. Grand Blvd.
Detroit, Michigan 48202
(free)

STRAIGHT-LINE KINEMATICS (PSSC FILM NO. 0107)

Recommendation: Highly recommended for development of this concept.

Summary: The kinematics of straight line motion is developed by experiments using an automobile with instruments attached that record simultaneously the distance traversed, the speed and the acceleration as a function of time.

The three graphs for a certain run are analyzed and the film shows that the speed and acceleration curves produced during the experiment can also be derived by taking the appropriate slopes of the distance and speed curves respectively. A simple graphical technique is used throughout, employing only a divider and a straight-edge.

Finally, it shows how the procedure can be reversed. The distance traveled and the change in speed for a given time interval are represented by areas under the speed and acceleration curves respectively. From the acceleration curve, the speed and distance curves are derived by approximating the relevant areas.

Throughout the film it is emphasized that the graphs of the three quantities are not independent.

Application: Use as a review after class discussion of the distance-speed-acceleration relationship.

Length & Type: 34 min., black & white, sound

Source: Modern Learning Aids ($6.00)

Additional Notes: (a) In Newtonian mechanics the relationships among distance, speed and acceleration depend only on their mathematical definitions. No law of physics is involved in these relationships, such as conversion of momentum or energy. In this experiment, the instruments attached to the automobile have been engineered to record the distance, speed and acceleration. As pointed out in the film, one could just as well have drawn any arbitrary curve for one of these, and the other two could be derived from the definitions. The laws of nature govern the motion of a body but not the relation among these curves.

(b) The three curves from the film have been reproduced and are available in minimum quantities of 25 from Macalaster Scientific Corporation, 60 Arsenal St., Watertown, Mass. 02172 (inquire for price).

DIGITAL COMPUTER TECHNIQUES: INTRODUCTION (NAVY FILM NO. MN 8969A)

Recommendation: Highly recommended for application as indicated below.

Summary: Provides a general introduction to digital computers. Reviews historical origins of calculating devices, and points out differences between digital and analog computers. Shows principal steps involved in solution of a problem by a digital computer.

Application: As a preview to digital computers or just before the chapter on organization of a computer.

Length & Type: 16 min., color, sound

Source: Address requests for loan to Commandant of your local Naval District, attention of Film Librarian. (No charge.)

DIGITAL COMPUTER TECHNIQUES: COMPUTER LOGIC, BINARY NUMBERS (NAVY FILM NO. MN 8969B)

Recommendation: Good for limited application.

Summary: Defines logic as applied to computers. Explains binary number system and binary addition. Cites examples of code variations of binary system.

Application: Use as introduction or review for binary numbers, but don't rely entirely on the film to teach this topic.

Length & Type: 12 min., color, sound

Source: Address requests for loan to Commandant of your local Naval District, attention of Film Librarian. (No charge.)

DIGITAL COMPUTER TECHNIQUES: COMPUTER UNITS (NAVY FILM NO. MN 8969D)

Recommendation: Good for clarification of computer organization.

Summary: Describes in a general way the functioning of the major units of a computer; input, output, memory, accumulator, and control. Shows the purpose of clocking and sequencing.

Application: For review after class discussion of the overall plan for a computer.

Length & Type: 24 min., color, sound

Source: Address requests for loan to Commandant of your local Naval District, attention of Film Librarian. (no charge)

DIGITAL COMPUTER TECHNIQUES: PROGRAMMING (NAVY FILM NO. MN 8969F)

Recommendation: Good film for illustrating programming.

Summary: Defines programming, shows flow chart preparation, and shows how instructions are encoded into machine language.

Application: Early in section on programming

Length & Type: 14 min., color, sound

Source: Address requests for loan to Commandant of your local Naval District, attention of Film Librarian. (No charge).

Recommendation: Highly recommended for illustration of this problem.

Summary: A delightful animated presentation of this classical problem, showing Euler's analysis.

Application: After students have read the problem in the text.

Length & Type: 4 min., color, sound

Source: Check with your usual film library; if unable to obtain locally, it is available for sale ($65) or rental ($4.00) from:

International Film Bureau, Inc.
332 South Michigan Avenue
Chicago, Illinois 60604

PERIODIC MOTION (PSSC FILM NO. 0306)

Recommendation: Optional film; use only if teacher is familiar with contents and wishes to develop this topic more fully.

Summary: A number of examples of periodic motion are exhibited, and for simple harmonic motion a displacement vs. time graph is drawn by a moving body. From this plot, graphical methods are used to demonstrate the proportionality between the acceleration and the negative of the displacement from equilibrium. This proportionality is used to define simple harmonic motion. Newton's law of motion $F = ma$ then requires that the force F be linear restoring, i.e., $F = -kx$. This is suggested as an alternate defining relation for simple harmonic motion.

By looking at projections of the displacement, velocity, and acceleration vectors for the uniform circular motion, it is shown that the mutually independent vertical and horizontal components both exhibit simple harmonic motion.

From the identification of simple harmonic motion with one component of uniform circular motion, the period $T = 2\pi\sqrt{m/k}$ of this component motion is derived, and is checked by experiment.

Finally, reference is made to the fact that a pendulum, for small oscillations, moves in simple harmonic motion.

Application: Chapter B-5

Length & Type: 33 min., black & white, sound

Source: Modern Learning Aids

FLIGHT SIMULATION

Recommendation: Good film for use as outlined below.

Summary: Illustrates the use of digital computers in solving complex simulation problems. Shows development of a new programming approach to real-time flight simulation.

Application: During A-6. Don't become involved in the mathematics shown, but concentrate on the computer application and the real-time concept.

Length & Type: 20 min., color, sound

Source: Modern Talking Picture Service (New York, Chicago, and Los Angeles offices only). (No charge).

COMPUTERS AND HUMAN BEHAVIOR

Recommendation: Optional film for limited application.

Summary: Demonstrates research being conducted with electronic digital computers in an effort to evolve new theories about human mental processes such as depth perception, memorization, and problem solving.

Application: Near the end of Part A; might be used to illustrate an application of computers in the social sciences.

Length & Type: 30 min., black & white, sound

Source: This film is part of a National Educational Television series entitled "Focus on Behavior". Film libraries at Yeshiva, Syracuse and Indiana Universities have it available for rental ($5.40 from Indiana). It may also be available in local film libraries. If unable to locate, write to Indiana University Audio-Visual Center, Bloomington, Indiana 47401.

Recommendation: Good film to illustrate an area of engineering which is not well known - engineering psychology. Also illustrates a specialized case of optimization.

Summary: Shows some of the ways in which man handles and processes information, the problems and dynamics of information feedback between man and machines, man's behavior in highly complex man-machine systems, and the way in which information gained from these procedures has led to the redesign of equipment to fit human capabilities.

Application: During Part B or even Part C, but after optimization.

Length & Type: 30 min., black & white, sound.

Source: This film is part of a National Educational Television series entitled, "Focus on Behavior". Film libraries at Yeshiva, Syracuse and Indiana Universities have it available for rental ($5.40 from Indiana). It may also be available in local film libraries. If unable to locate, write to Indiana University Audio-Visual Center, Bloomington, Indiana 47401.

COMPUTER SKETCHPAD

Recommendation: Good film to show a specialized use of computers.

Summary: Investigates a programming system which permits man to communicate directly with a computer by drawing sketches on an oscilloscope. Scientists explain the system and discuss its applications in industry and research.

Application: Late in Part A.

Length & Type: 29 min., Black & White, sound.

Source: This film is one of the National Educational Television "Science Reporter" series. Film libraries at Yeshiva, Syracuse and Indiana Universities have it available for rental ($6.50 from Yeshiva). It may also be available in local film libraries. If unable to locate, write to Indiana University Audio-Visual Center, Bloomington, Indiana 47401.

UNIVERSE OF NUMBERS

Recommendation: Highly recommended for use as indicated below.

Summary: The film is concerned first with a history of computer development from Pascal's mechanical calculator (17th Century) to ENIAC, the first electronic computer, developed by John Mauchly and J. Presper Eckert in the mid-1940's. Mr. Eckert describes his work, and an explanation is given of how a computer solves a problem. The concept of storing both data and instructions in number form is developed and a computer is shown being programmed.

Application: May be used as an introductory film to Part A or before Chapter A-6.

Length & Type: 29 min., black & white, sound.

Source: This film is part of a National Educational Television series entitled "Computer and the Mind of Man". Film libraries at Yeshiva, Syracuse, and Indiana Universities have it available for rental ($6.50 from Yeshiva). It may also be available in local film libraries. If unable to locate, write to Indiana University Audio-Visual Center, Bloomington, Indiana 47401.

UNIVERSAL MACHINE

Recommendation: Optional film; use for enrichment if you wish to discuss the "computer revolution".

Summary: Dr. DeCarlo, Director of Education for IBM, comments on the fact that the computer revolution represents a fundamentally different kind of advance because, unlike past industrial advances, the computer manipulates and processes information at almost incredible speeds. The problem of deciding on what to use as a universal "machine language" is explained.

Application: During or after Chapter A-5.

Length & Type: 29 min., black & white, sound.

Source: This film is part of a National Educational Television series entitled "Computer and the Mind of Man". Film libraries at Yeshiva, Syracuse, and Indiana Universities have it available for rental ($6.50 from Yeshiva). It may also be available in local film libraries. *If unable to locate, write to Indiana University* Audio-Visual Center, Bloomington, Indiana 47401.

THE CONTROL REVOLUTION

Recommendation: Good film for illustration of closed-loop control systems.

Summary: The initial section of the film uses animation to show the basic elements in in a self-adjusting control system. Feedback is shown to be essential; a thermostat is shown as a simple example, and control systems using computers are also discussed. Finally, some comments are made about the ways in which computers release management from routine decision-making so that increased attention can be given to more difficult problems.

Application: Late in Part B or during chapter on feedback.

Length & Type: 29 min., black & white, sound.

Source: This film is part of a National Educational Television series entitled "Computer and the Mind of Man". Film libraries at Yeshiva, Syracuse and Indiana Universities have it available for rental ($6.50 from Yeshiva). It may also be available in local film libraries. If unable to locate, write to Indiana University, Audio-Visual Center, Bloomington, Indiana 47403.

MANAGERS AND MODELS

Recommendation: Good film for illustrating the use of the digital computer as a modeling tool.

Summary: Illustrates the design and simulation capacities of the digital computer in rocket firing, selecting optimum design for a chemical plant, and operation of a sugar refinery. Discusses prediction, optimization, and decision making.

Application: During B-1, B-2 or B-3

Length & Type: 29 min., black & white, sound

Source: This film is part of a National Educational Television series entitled "Computer and the Mind of Man". Film libraries at Yeshiva, Syracuse and Indiana Universities have it available for rental ($6.50 from Yeshiva). It may also be available in local film libraries. If unable to locate, write to Indiana University Audio-Visual Center, Bloomington, Indiana 47401.

Recommendation: Good for limited application.

Summary: The question, "Will machines ever run man?", is considered by Mr. J. Presper Eckert, co-inventor of the first electronic computer, Dr. Ernest Nagel, Professor of Philosophy at Columbia University, and Dr. DeCarlo, Director of Education for IBM. Philosophical and sociological implications of the impact of technology on our society are discussed.

Application: Near the end of the course.

Length & Type: 29 min., Black & White, sound.

Source: This film is part of a National Educational Television series entitled "Computer and the Mind of Man". Film libraries at Yeshiva, Syracuse and Indiana Universities have it available for rental ($6.50 from Yeshiva). It may also be available in local film libraries. If unable to locate, write to Indiana University Audio-Visual Center, Bloomington, Indiana 47401.

THE OHIO RIVER, STAIRWAY TO PROGRESS

Recommendation: Optional film to illustrate modeling.

Summary: Shows model tests of flood conditions on the Ohio River to determine if new locks and dams would affect flood crests.

Application: During study of modeling.

Length & Type: 14 min., color, sound

Source: Division Engineer
U.S. Army Engineer Division, Ohio River
Federal Building
P.O. Box 1159
Cincinnati, Ohio 45202

(no charge)

CRITICAL PATH

Recommendation: Good film to illustrate an application of optimization.

Summary: This is a British film which shows, by animation, how the concept of "critical path" is used in establishing schedules in the construction industry. It illustrates how a logical sequencing of events leads to a useful algorithm which is applied to an optimization problem.

Application: After Chapter B-1.

Length & Type: 15 min., color, sound.

Source: Local film libraries. If unable to locate, write to the distributor, International Film Bureau, Inc., 322 South Michigan Avenue, Chicago, Illinois 60604. (rental fee not known).

AUTOMATION: WHAT IT IS AND WHAT IT DOES

Recommendation: Good film for giving a general view of feedback and computers.

Summary: Although intended primarily for junior high school, this film does illustrate in a general way some of the concepts of the ACCP course. The meaning and levels of automation are explored, and the uses of feedback and computers in automated processes are illustrated. The student is encouraged to explore the implications of increasing automation for his future.

Application: After Chapter C-2.

Length & Type: 13 min., color, sound.

Source: Local film libraries or directly from Coronet Instructional Films, 65 E. South Water Street, Chicago, Illinois 60601. ($3.00)

TACOMA NARROWS BRIDGE COLLAPSE (8 MM CARTRIDGE FILM LOOP)

Recommendation: Highly recommended as a dramatic example of an unstable system.

Summary: Shows oscillation and ultimate collapse of Tacoma Narrows Bridge in 1940. A detailed description is provided with the film loop.

Application: During section on stability. May also be used at the beginning of the course as an example of an engineering failure.

Length & Type: 4 min. 40 sec., color, silent, 8 mm cartridge film loop.

Source: Available for purchase only (No. 80-218/1 in super-8 mm is $15.50; No. 80-218/2 in regular 8 mm is $12.50)
Order from: Ealing Film Loops
2323 Massachusetts Ave.
Cambridge, Mass. 02140

Also available in 16mm form for purchase from Macalester Scientific Corp.

FILMS REVIEWED BUT NOT FOUND USEFUL FOR BCCP

1. BUDGET SIZE BIKINI (Army Engineers)
2. CHALLENGE AND RESPONSE (General Motors)
3. COMPUTER STUDIES OF FLUID DYNAMICS (Los Alamos)
4. DEBT TO THE PAST: SCIENCE AND TECHNOLOGY (Moody)
5. DIGITAL COMPUTER TECHNIQUES: COMPUTER LOGIC, LOGIC ELEMENTS (Navy No. NN 8969C)
6. DIGITAL COMPUTER TECHNIQUES: LOGIC CIRCUIT ELEMENTS (Navy No. NN 8969E)
7. ENERGY AND WORK (PSSC No. 0311)
8. HOW DO YOU COUNT? (International)
9. THE IDEA OF NUMBERS (International)
10. THE INFORMATION EXPLOSION (Modern Talking Picture Service)
11. INTRODUCTION TO ANALOG COMPUTERS (AEC)
12. LOGIC BY MACHINE (NET)
13. MEASUREMENT (PSSC No. 0105)
14. NCR ELECTRONIC DATA PROCESSOR (National Cash Register)
15. PROGRAMMING LANGUAGES (System Development Corp.)
16. SEARCH (General Motors)
17. SENSE PERCEPTION (Moody)
18. SHORT TERM VISUAL MEMORY (Bell Labs)
19. VISUAL PERCEPTION (ETS)